Upd.	Modify Description	Date
02	Aggiornamento per integrazione termocamera FLIR, fogli 4A, 15 e 20	12/02/17
01	Aggiunto impianto Multicontrol, Video Matrice e Thermal camera FLIR. Inseriti cavi per ripetizione video su TV Capitano e Armatore. Spostato VHF#2 su cruscotto.	07/02/17
00	Prima emissione	07/11/16

Benetti
Via Michele Coppino,104-55049 VIAREGGIO (LU) Italy
Tel. +39-0584-3821 Fax +39-0584-396232

Proprieta' di AZIMUT-BENETTI s.p.a.
Senza autorizzazione scritta della stessa il presente disegno non potra' essere utilizzato per la costruzione dell'oggetto rappresentato ne venire comunicato a terzi o riprodotto anche parzialmente. La societa' proprietaria tutela i propri diritti a rigore di legge.

All proprietary rights reserved by AZIMUT-BENETTI s.p.a.
This drawing shall not be reproduced also partially or in any way utilized for the manufacture of the component or unit herein illustrated and must not be released to other parties without written consent. Any infringement will be legally pursued

A4

Scala/Scale

Approvazione Registro/Rule Approval

	Date	Name
Drawn by	12/02/17	TEAM ITALIA
Checked by	12/02/17	Luca Ravenna Corvi
Approved by	12/02/17	Luca Ravenna Corvi
Department	UTE	

Designazione/Designation

SCHEMI NAV-COMM

NAV-COMM SCHEMATICS

Commessa/Construction	Disegno/Drawing Nr	Foglio/Sheet	File name	Data/Date
BM002	6510	1/38	BM002_6510_02_01_01 _SCHEMI NAVCOM	12/02/2017

MARINE ELECTRONIC TECHNOLOGY APPLICATIONS

TEAM Italia s.r.l.
Tecnologie Elettroniche per Applicazioni Marittime
Viareggio
www.team-italia.it

i-BRIDGE
INTEGRATED TOUCH BRIDGE

Project	BM002
Customer	BENETTI
Title	SCHEMATIC DIAGRAM

Rev.	AF
Date	13/02/17
Filename	BM002 SCHEMATIC DIAGRAM AF
Pages	25

CHANGES LIST

REV.	PAGE	CHANGE DESCRIPTION	DATE	REV.	PAGE	CHANGE DESCRIPTION	DATE
AB	3,4A,4B,6,7,10, 11,12,20,51,52	UPDATED TEAM ITALIA JUNCTION BOXES	02/02/16				
AB	3,10,51,52	UPDATED TEAM ITALIA ORIGINAL CABLES	02/02/16				
AB	20	UPDATED WHC SYSTEM	02/02/16				
AB	3,7,20,51	ADDED DIAGNOSTIC SYSTEM	02/02/16				
AC	ALL PAGES	GENERAL REVIEW OF SCHEMATIC DIAGRAM	03/11/16				
AD	51B	UPDATED VHF#2 POSITION	23/11/16				
AD	3A,3B	ADDED VIDEO SIGNAL TO OWNER TV AND CAPTAIN TV	23/11/16				
AD	3A,3B	UPDATED POSITION OF RADARS SWITCH BOX	23/11/16				
AE	21A,21B,3A, 3B,8,16A,20	ADDED MULTICONTROL SYSTEM	26/01/17				
AE	16B,16A,3A, 3B,8,15,20,	ADDED VIDEO MATRIX SYSTEM	26/01/17				
AE	20	ADDED PREDISPOSITION OWNER CABIN BUTTON	26/01/17				
AE	15,3A,3B,16B	CONFIRMED THERMAL CAMERA AND UPDATED WIRING	26/01/17				
AE	10,3A	UPDATED CABLES TYPE	26/01/17				
AE	20	ADDED PITCH & ROLL IN WHC SYSTEM	26/01/17				
AF	4A,15,20	ADDED THERMAL CAMERA INTEGRATION WITH WHC	13/02/17				

REVISIONE AF	MODIFICA	TEAM Italia s.r.l. Tecnologie Elettroniche per Applicazioni Marittime Viareggio www.team-italia.it	PROGETTO: BM002 SCHEMATIC DIAGRAM AF COMMESSA: BM002 CLIENTE: BENETTI TITOLO: CHANGES LIST DIS.: DATA:
DATA 13/02/17	FIRMA		FOGLIO 2 DI 25 1 ◁▷ 3A

NB:
ALL EQUIPMENT MUST BE GROUNDED WITH CABLE 2,5 mm² MINIMUM

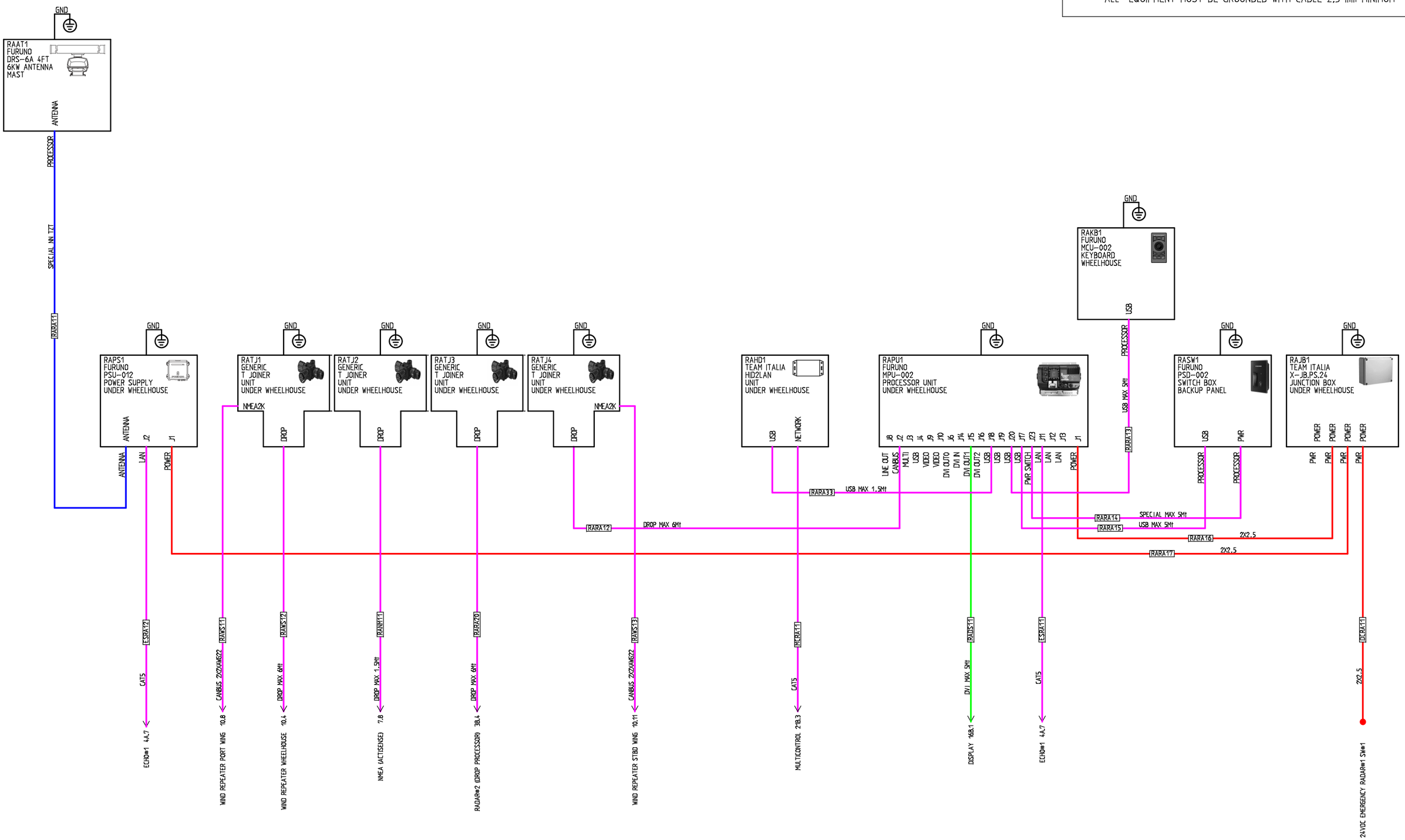

REVISIONE	MODIFICA				
AE		TEAM ITALIA MARINE ELECTRONIC TECHNOLOGY APPLICATIONS — i-BRIDGE	TEAM Italia s.r.l. Tecnologie Elettroniche per Applicazioni Marittime Viareggio www.team-italia.it	PROGETTO: BM002 SCHEMATIC DIAGRAM AF	FOGLIO 3A
DATA 26/01/17	FIRMA			COMMESSA: BM002 CLIENTE: BENETTI TITOLO: RADAR#1	DI 25
				DIS.: DATA:	2 ◁ ▷ 3

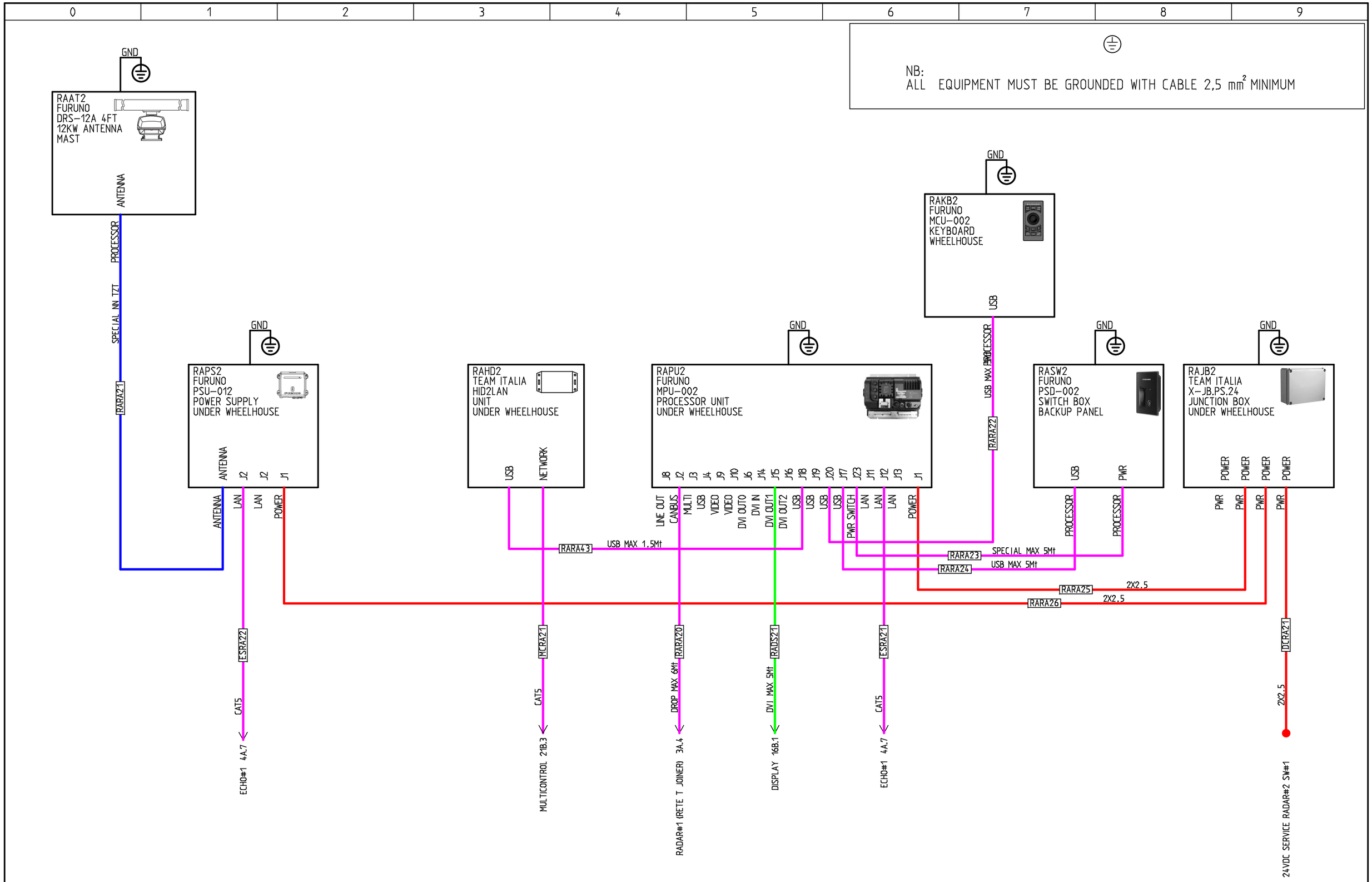

REVISIONE	MODIFICA		PROGETTO:	BM002 SCHEMATIC DIAGRAM AF	FOGLIO 3B
AE		TEAM Italia s.r.l. Tecnologie Elettroniche per Applicazioni Marittime Viareggio www.team-italia.it	COMMESSA:	BM002	DI 25
DATA	FIRMA		CLIENTE:	BENETTI	
26/01/17			TITOLO:	RADAR#2	3 ◁ ▷ 4
			DIS.:	DATA:	

NB:
ALL EQUIPMENT MUST BE GROUNDED WITH CABLE 2,5 mm² MINIMUM

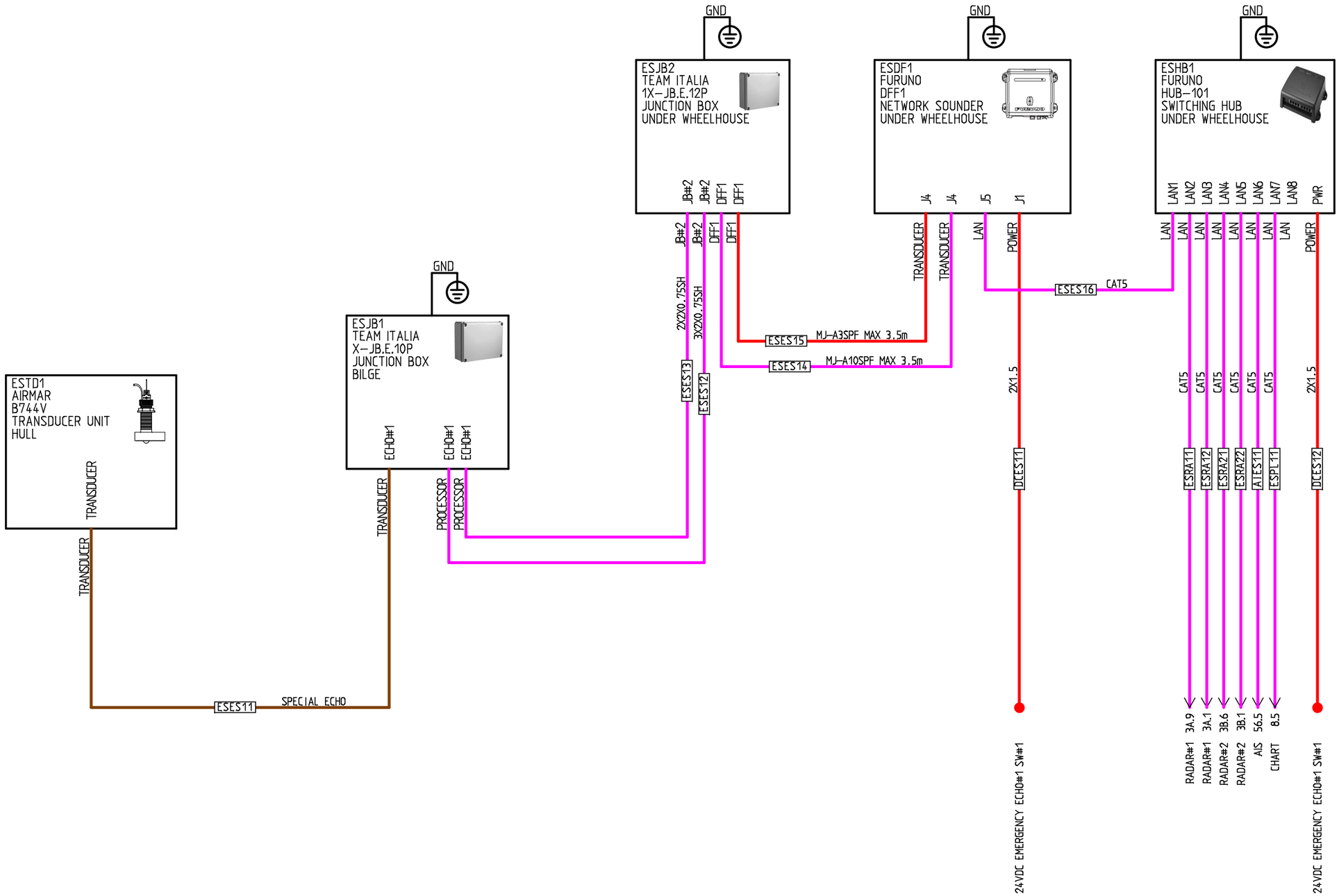

REVISIONE	MODIFICA		PROGETTO:	BM002 SCHEMATIC DIAGRAM AF	FOGLIO 4A
AF		TEAM Italia s.r.l. Tecnologie Elettroniche per Applicazioni Marittime Viareggio www.team-italia.it	COMMESSA:	BM002	DI 25
DATA	FIRMA		CLIENTE:	BENETTI	
13/02/17			TITOLO:	ECHO#1	3B ◁ ▷ 4B
			DIS.:	DATA:	

0	1	2	3	4	5	6	7	8	9

NB:
ALL EQUIPMENT MUST BE GROUNDED WITH CABLE 2,5 mm² MINIMUM

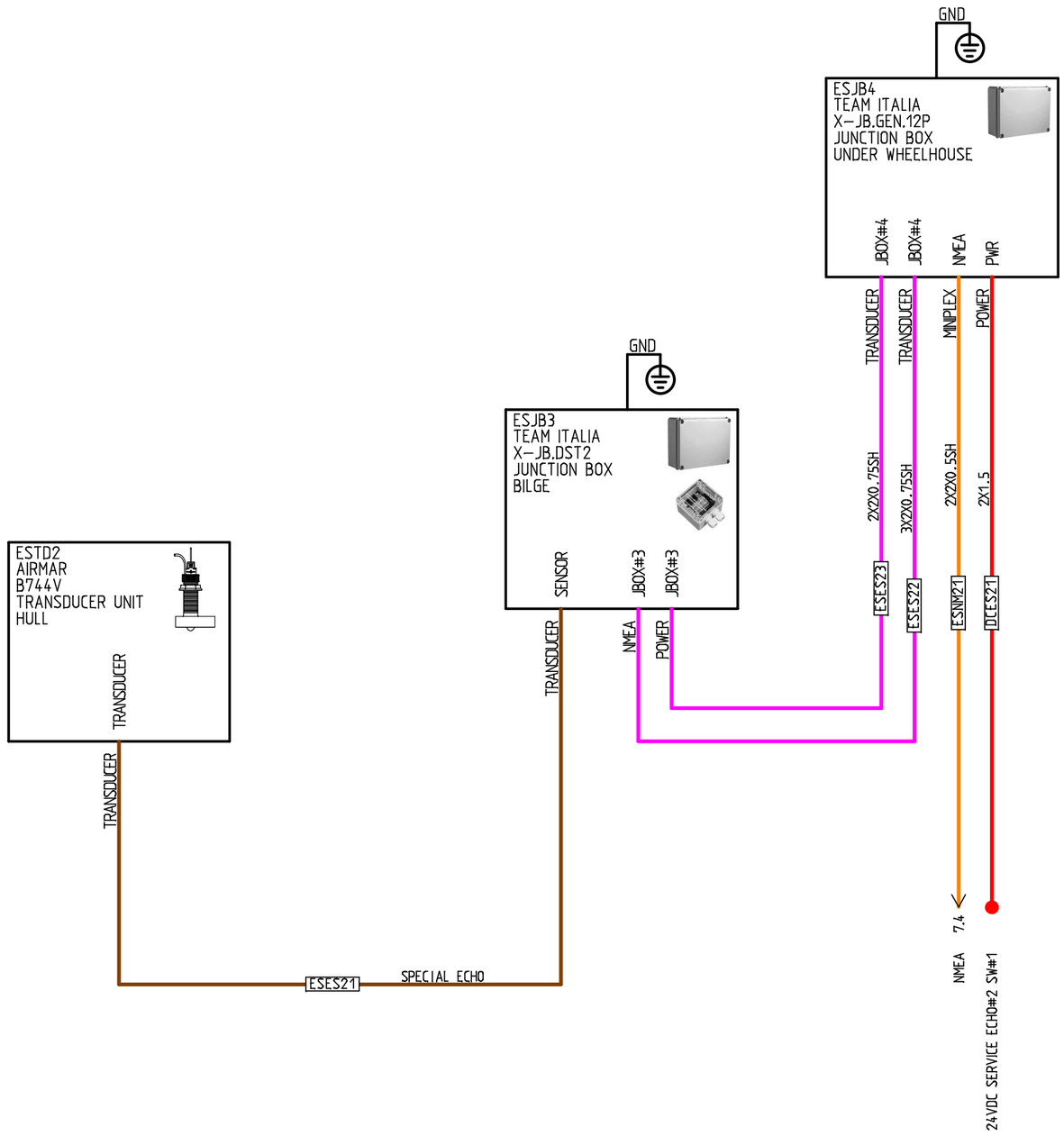

REVISIONE	MODIFICA				
AC		TEAM Italia s.r.l. Tecnologie Elettroniche per Applicazioni Marittime Viareggio www.team-italia.it	PROGETTO:	BM002 SCHEMATIC DIAGRAM AF	FOGLIO 4B
			COMMESSA:	BM002	DI 25
DATA 03/11/16	FIRMA		CLIENTE:	BENETTI	
			TITOLO:	ECHO#2	4 ◁▷ 6
			DIS.:	DATA:	

NB:
ALL EQUIPMENT MUST BE GROUNDED WITH CABLE 2,5 mm² MINIMUM

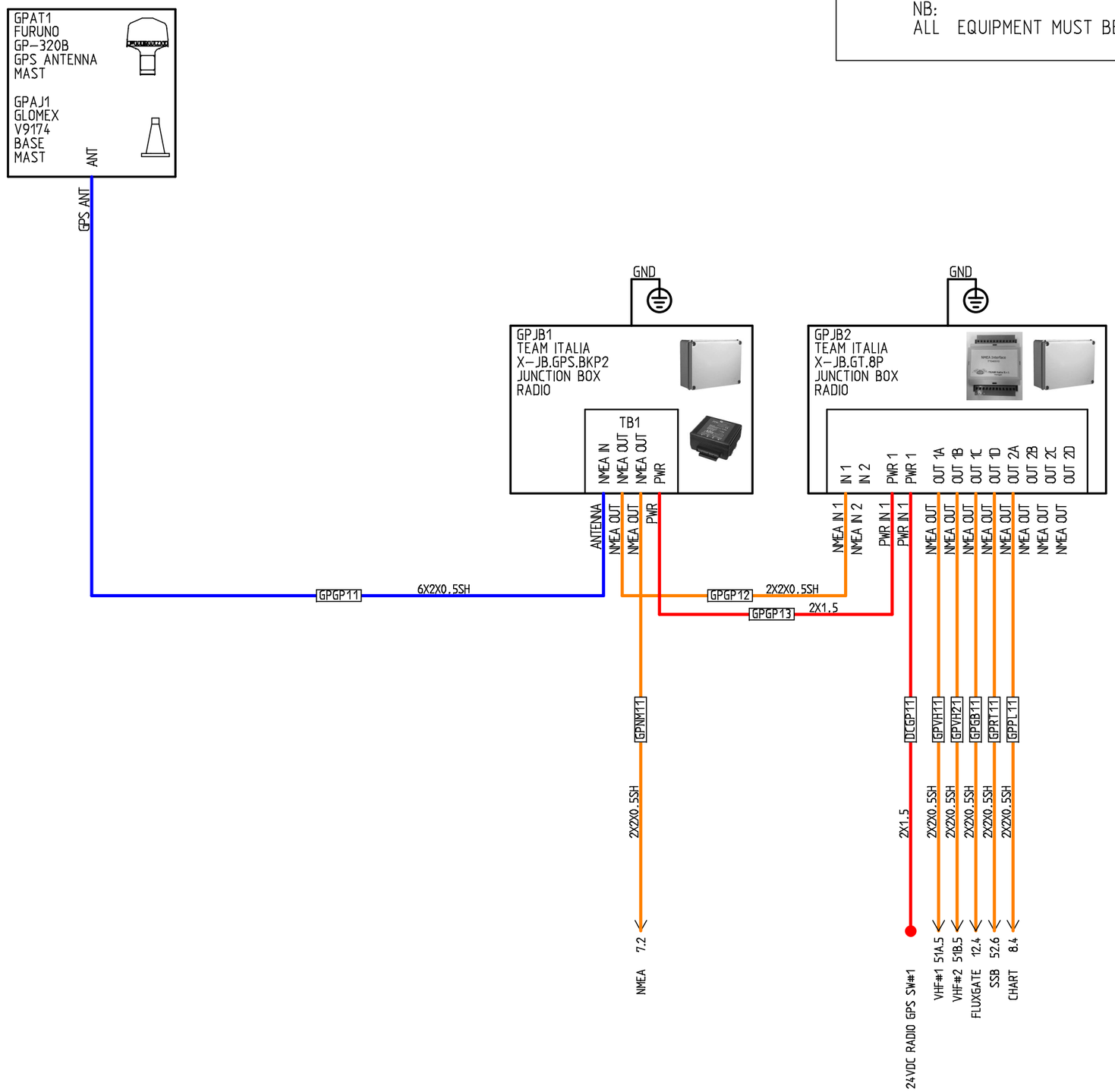

REVISIONE	MODIFICA		PROGETTO:	BM002 SCHEMATIC DIAGRAM AF	FOGLIO 6
AC		TEAM Italia s.r.l. Tecnologie Elettroniche per Applicazioni Marittime Viareggio www.team-italia.it	COMMESSA:	BM002	DI 25
			CLIENTE:	BENETTI	
DATA 03/11/16	FIRMA		TITOLO:	GPS	4 ◁ ▷ 7
			DIS.:	DATA:	

MARINE ELECTRONIC TECHNOLOGY APPLICATIONS

NB:
ALL EQUIPMENT MUST BE GROUNDED WITH CABLE 2,5 mm² MINIMUM

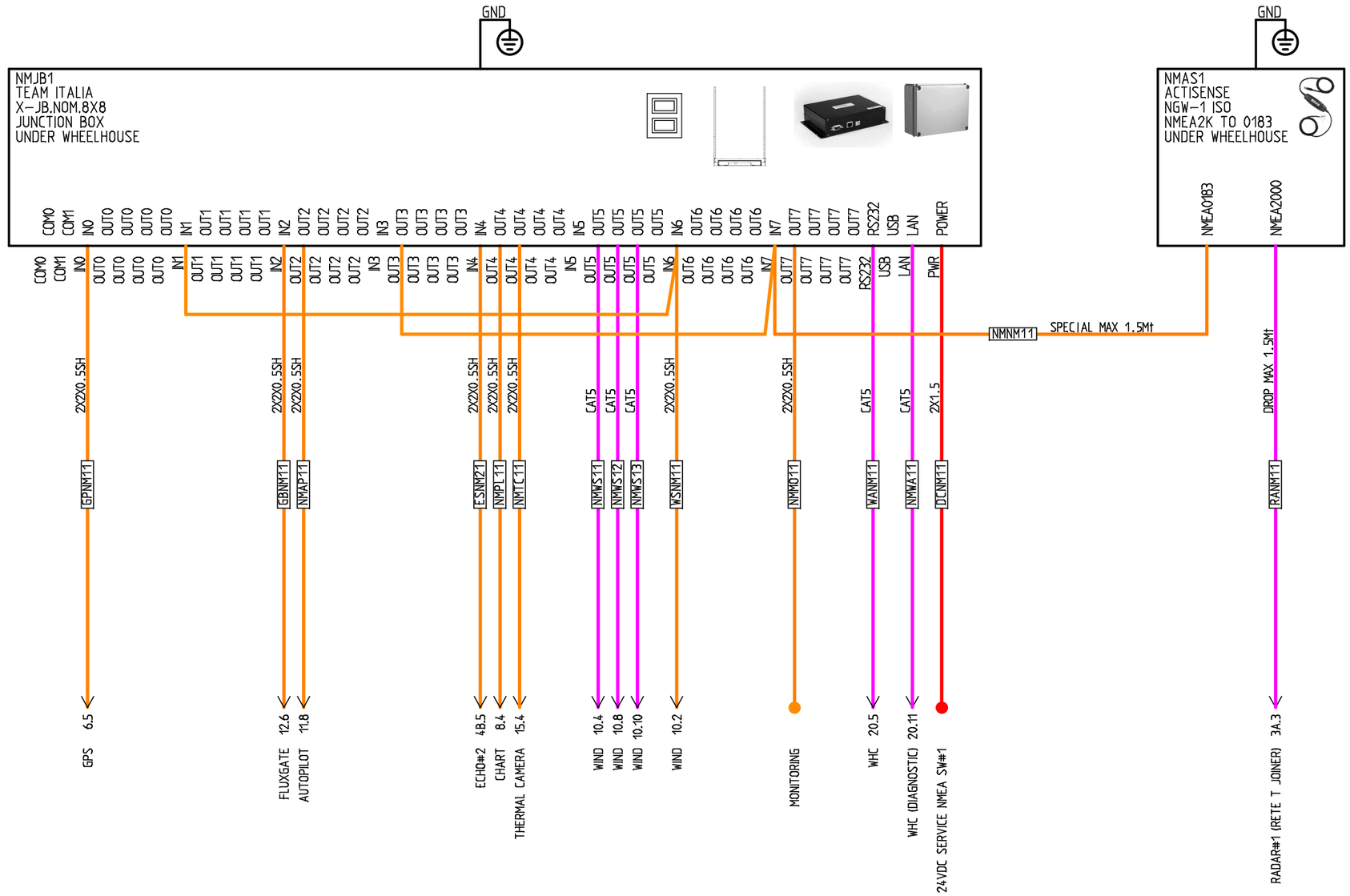

REVISIONE	MODIFICA		PROGETTO:	BM002 SCHEMATIC DIAGRAM AF	FOGLIO 7
AC		TEAM Italia s.r.l. Tecnologie Elettroniche per Applicazioni Marittime Viareggio www.team-italia.it	COMMESSA:	BM002	DI 25
DATA	FIRMA		CLIENTE:	BENETTI	
03/11/16			TITOLO:	NMEA	6 ◁▷ 8
			DIS.:	DATA:	

MARINE ELECTRONIC TECHNOLOGY APPLICATIONS

NB:
ALL EQUIPMENT MUST BE GROUNDED WITH CABLE 2,5 mm² MINIMUM

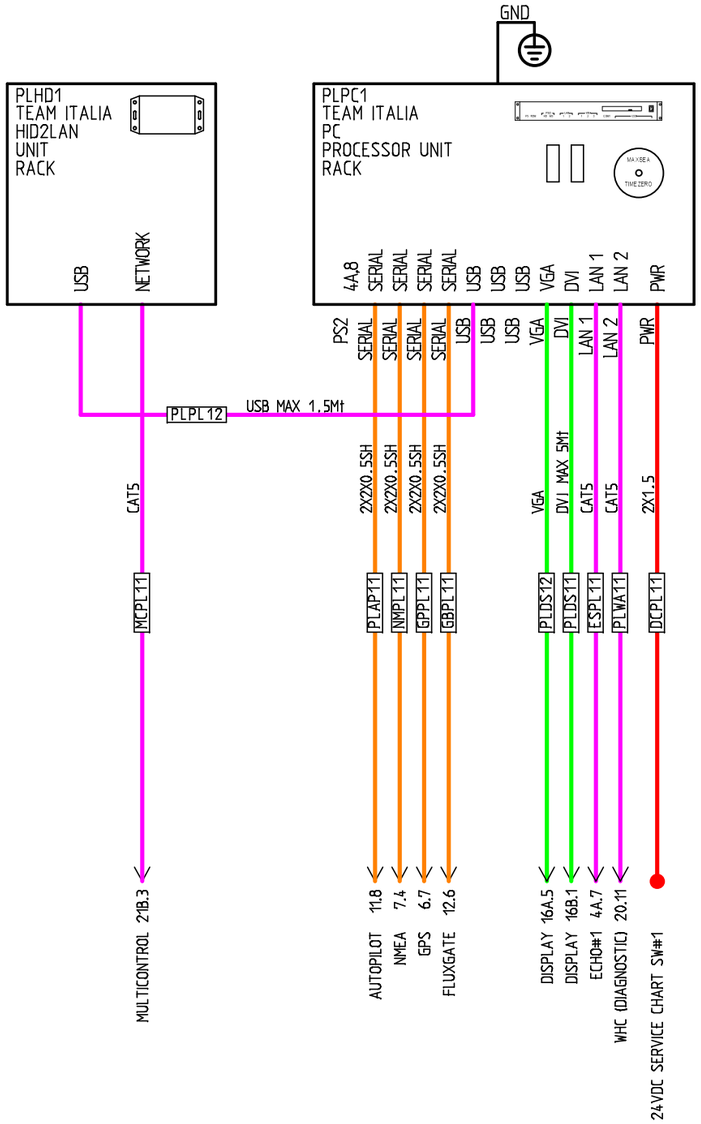

REVISIONE	MODIFICA		PROGETTO:	BM002 SCHEMATIC DIAGRAM AF	FOGLIO 8
AE		TEAM Italia s.r.l. Tecnologie Elettroniche per Applicazioni Marittime Viareggio www.team-italia.it	COMMESSA:	BM002	DI 25
DATA	FIRMA		CLIENTE:	BENETTI	
26/01/17			TITOLO:	CHART	7 ◁ ▷ 10
			DIS.:	DATA:	

MARINE ELECTRONIC TECHNOLOGY APPLICATIONS

NB:
ALL EQUIPMENT MUST BE GROUNDED WITH CABLE 2,5 mm² MINIMUM

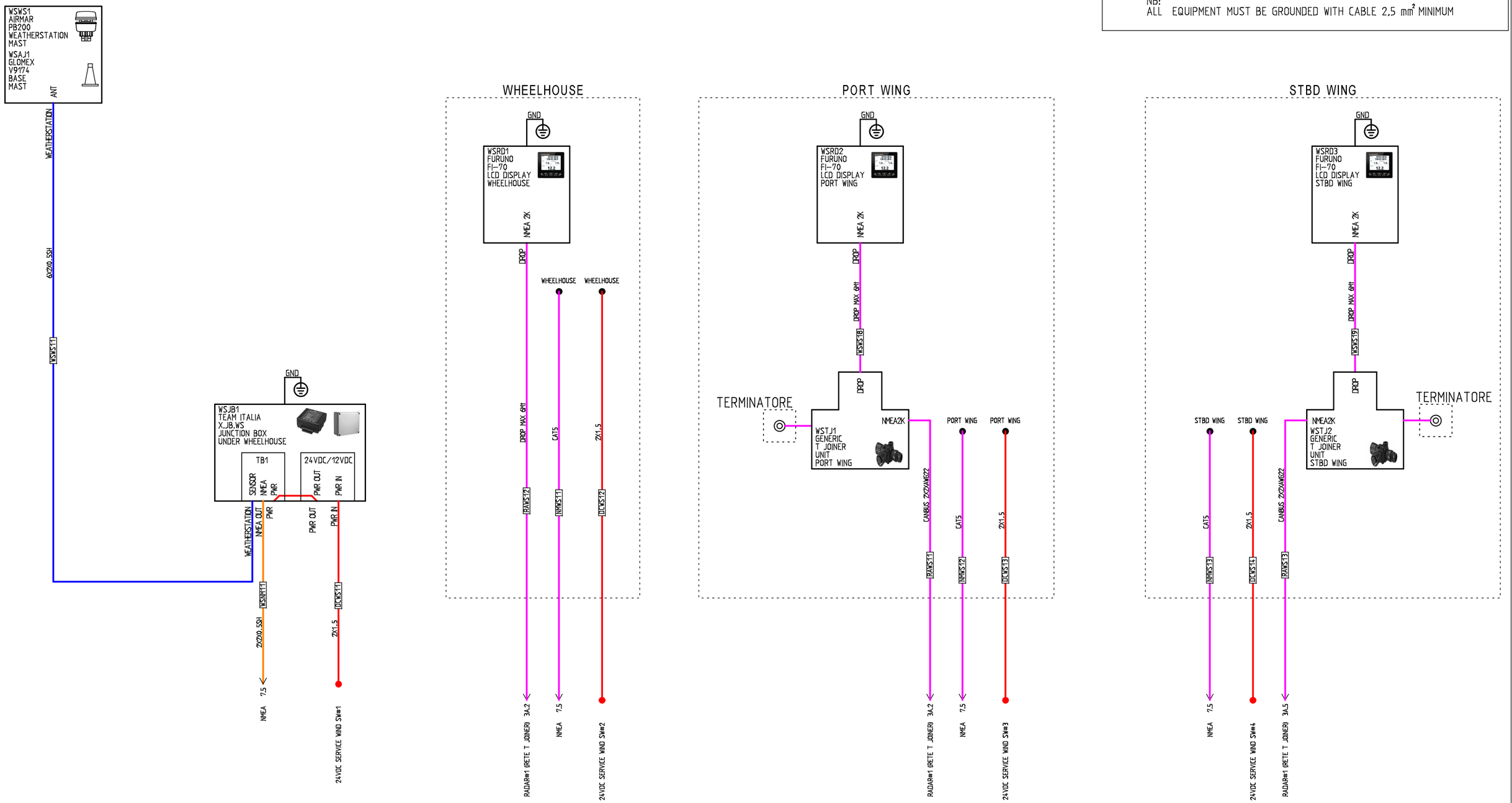

REVISIONE	MODIFICA
AE	
DATA 26/01/17	FIRMA

TEAM Italia s.r.l.
Tecnologie Elettroniche per Applicazioni Marittime
Viareggio
www.team-italia.it

MARINE ELECTRONIC TECHNOLOGY APPLICATIONS

i-BRIDGE

PROGETTO:	BM002 SCHEMATIC DIAGRAM AF
COMMESSA:	BM002
CLIENTE:	BENETTI
TITOLO:	WIND
DIS.:	DATA:

FOGLIO 10 DI 25

8 ◁ ▷ 11

NB:
ALL EQUIPMENT MUST BE GROUNDED WITH CABLE 2,5 mm² MINIMUM

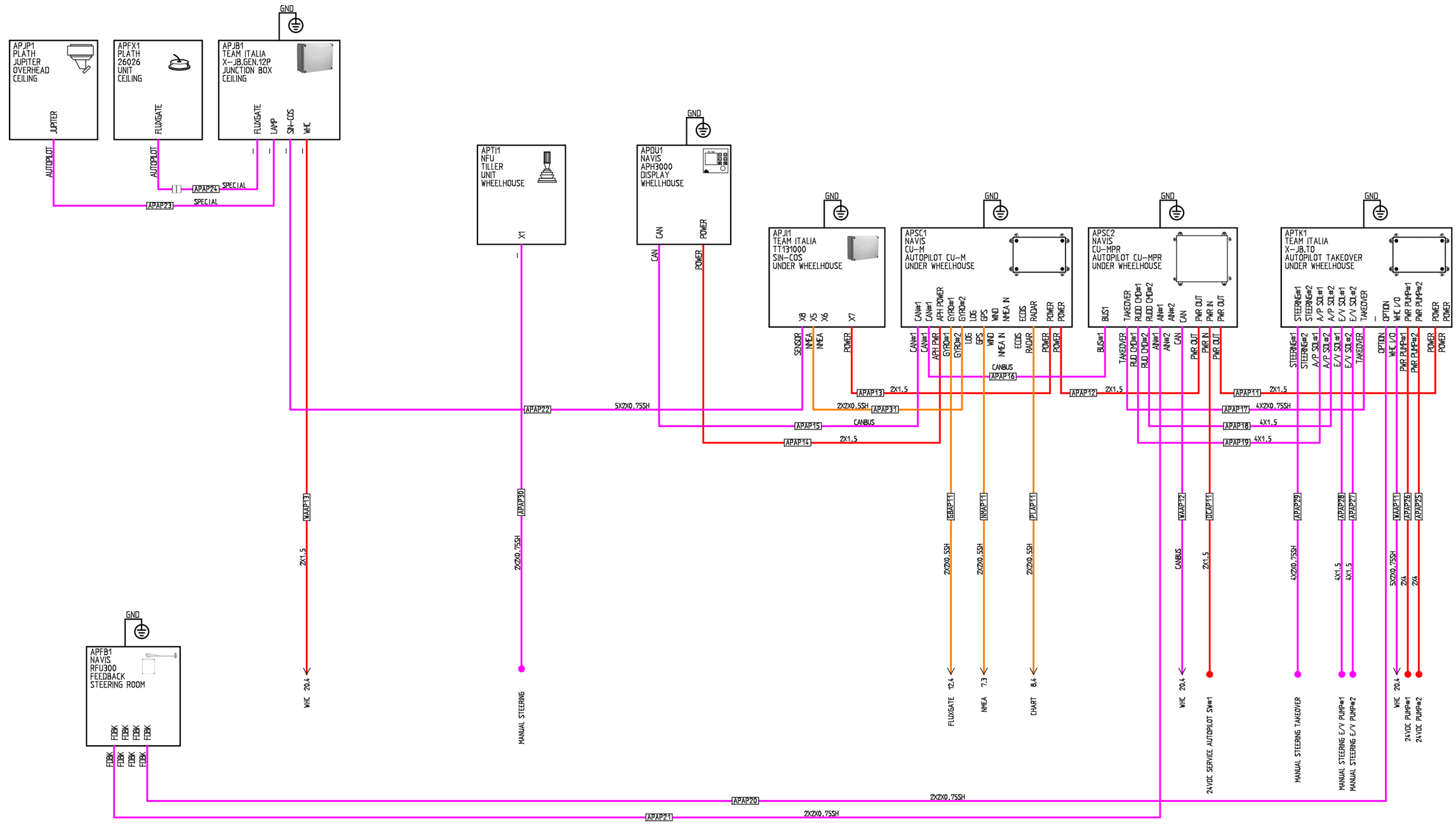

REVISIONE	MODIFICA
AC	
DATA	FIRMA
03/11/16	

TEAM ITALIA
MARINE ELECTRONIC TECHNOLOGY APPLICATIONS
i-BRIDGE

TEAM Italia s.r.l.
Tecnologie Elettroniche per Applicazioni Marittime
Viareggio
www.team-italia.it

PROGETTO:	BM002 SCHEMATIC DIAGRAM AF
COMMESSA:	BM002
CLIENTE:	BENETTI
TITOLO:	AUTOPILOT
DIS.:	DATA:

FOGLIO 11
DI 25
10 ◁ ▷ 12

NB:
ALL EQUIPMENT MUST BE GROUNDED WITH CABLE 2,5 mm² MINIMUM

SUGGESTED A GYROSCOPE COMPASS SENSOR FOR BEST PERFORMANCE

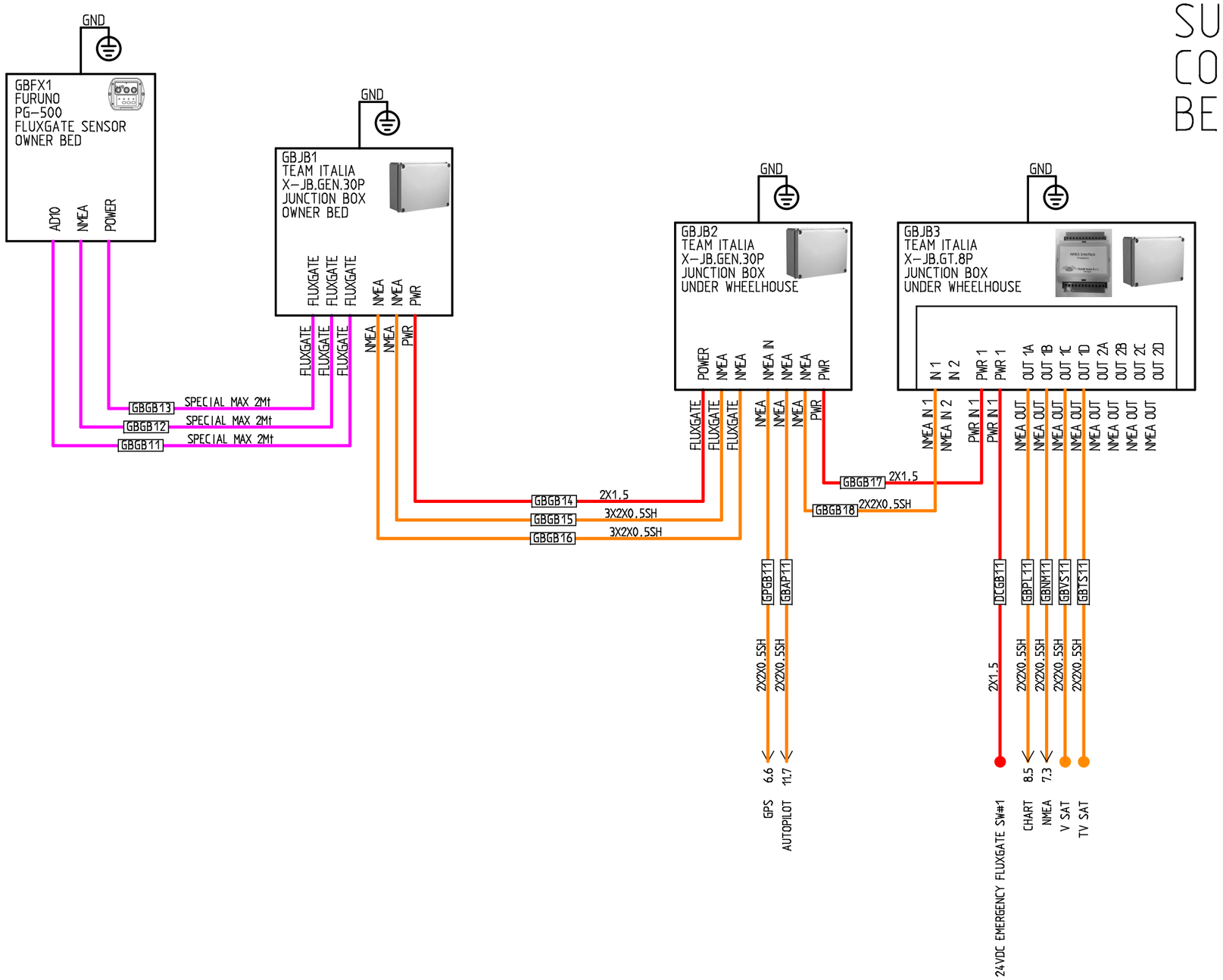

REVISIONE	MODIFICA		PROGETTO:	BM002 SCHEMATIC DIAGRAM AF	FOGLIO 12
AC		TEAM Italia s.r.l. Tecnologie Elettroniche per Applicazioni Marittime Viareggio www.team-italia.it	COMMESSA:	BM002	DI 25
			CLIENTE:	BENETTI	
DATA 03/11/16	FIRMA		TITOLO:	FLUXGATE	11 ◁ ▷ 15
			DIS.:	DATA:	

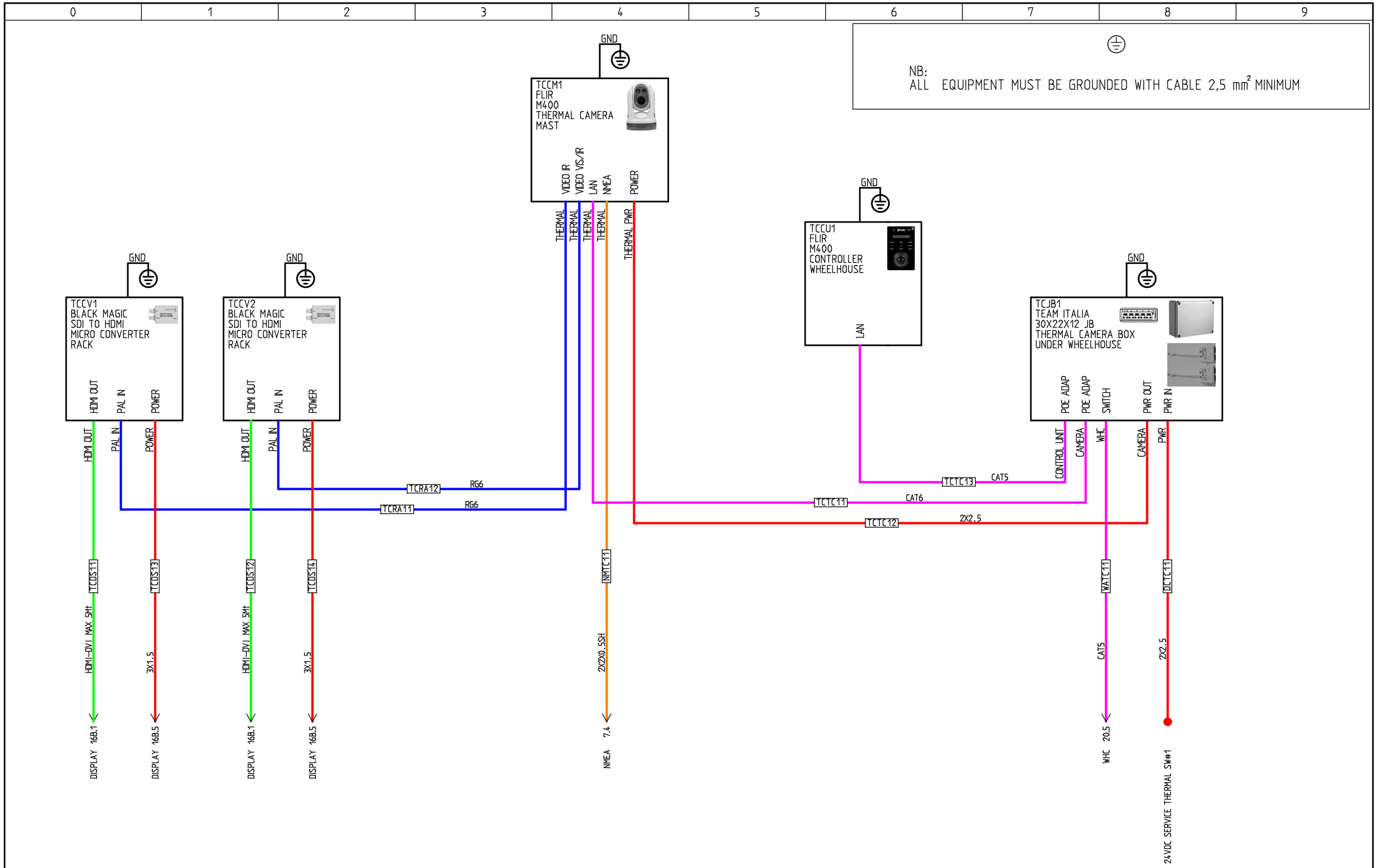

REVISIONE	MODIFICA				
AF		TEAM Italia s.r.l. Tecnologie Elettroniche per Applicazioni Marittime Viareggio www.team-italia.it	PROGETTO:	BM002 SCHEMATIC DIAGRAM AF	FOGLIO 15
			COMMESSA:	BM002	DI 25
			CLIENTE:	BENETTI	
DATA 13/02/17	FIRMA		TITOLO:	THERMAL CAMERA	12 ◁ ▷ 16A
			DIS.:	DATA:	

MARINE ELECTRONIC TECHNOLOGY APPLICATIONS

NB:
ALL EQUIPMENT MUST BE GROUNDED WITH CABLE 2,5 mm² MINIMUM

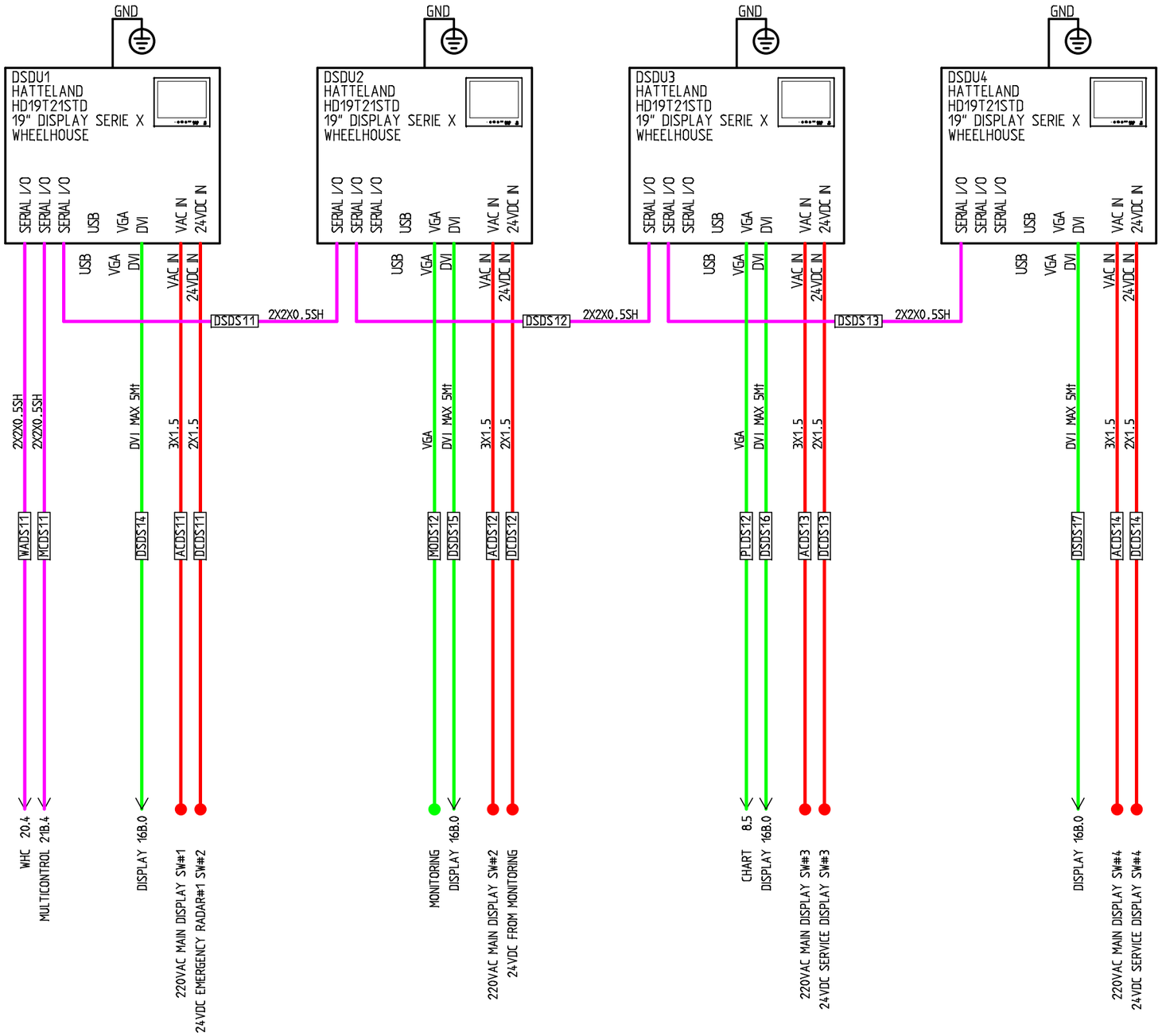

REVISIONE	MODIFICA		PROGETTO:	BM002 SCHEMATIC DIAGRAM AF	FOGLIO 16A
AE		TEAM Italia s.r.l. Tecnologie Elettroniche per Applicazioni Marittime Viareggio www.team-italia.it	COMMESSA:	BM002	DI 25
			CLIENTE:	BENETTI	
DATA 26/01/17	FIRMA		TITOLO:	DISPLAY	15 ◁ ▷ 16
			DIS.:	DATA:	

MARINE ELECTRONIC TECHNOLOGY APPLICATIONS

NB:
ALL EQUIPMENT MUST BE GROUNDED WITH CABLE 2,5 mm² MINIMUM

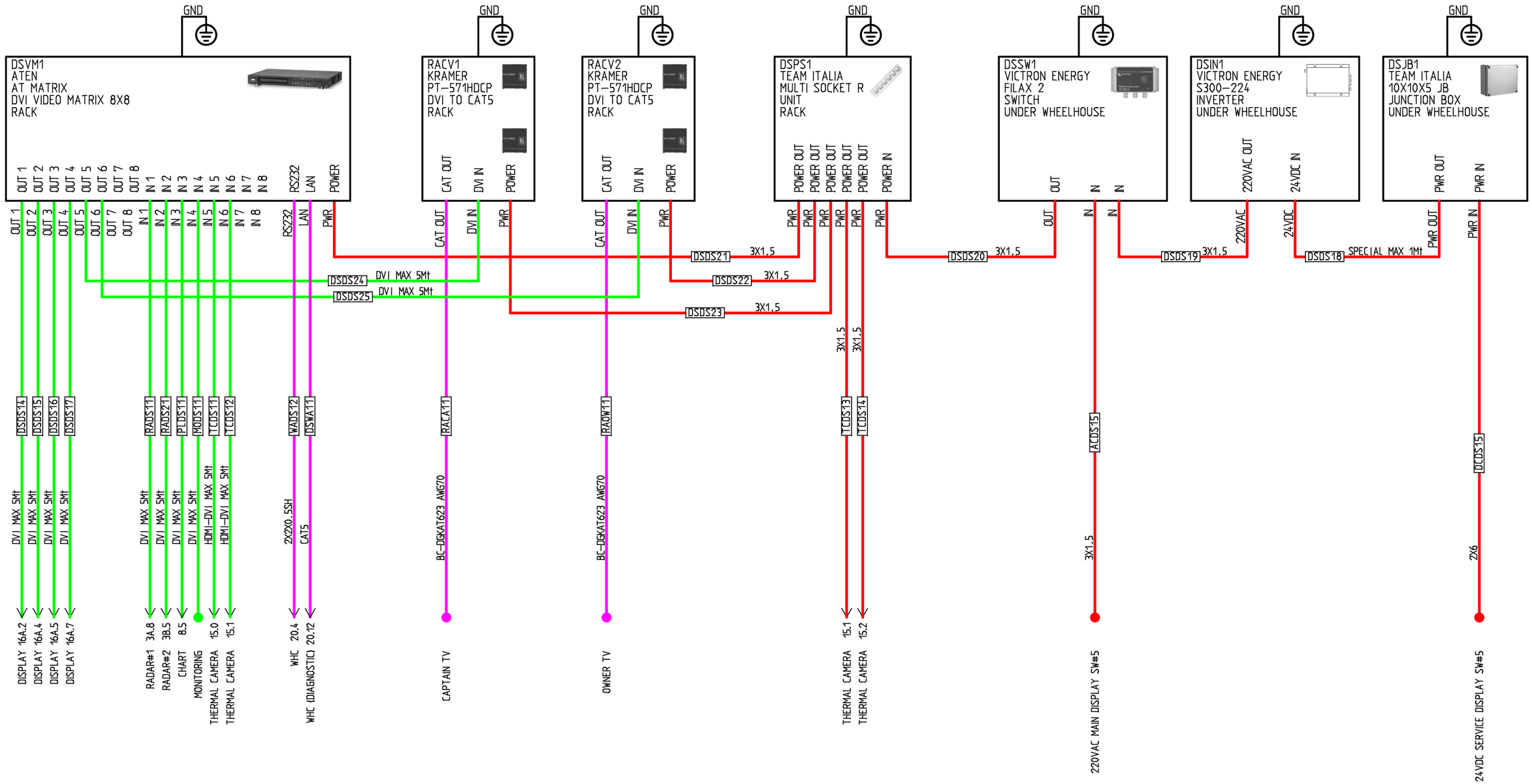

REVISIONE	MODIFICA		PROGETTO: BM002 SCHEMATIC DIAGRAM AF	FOGLIO 16 B
AE		TEAM Italia s.r.l. Tecnologie Elettroniche per Applicazioni Marittime Viareggio www.team-italia.it	COMMESSA: BM002	DI 25
			CLIENTE: BENETTI	
DATA 26/01/17	FIRMA		TITOLO: DISPLAY	16 ◁ ▷ 20
			DIS.: DATA:	

MARINE ELECTRONIC TECHNOLOGY APPLICATIONS

NB:
ALL EQUIPMENT MUST BE GROUNDED WITH CABLE 2,5 mm² MINIMUM

PRELIMINARY

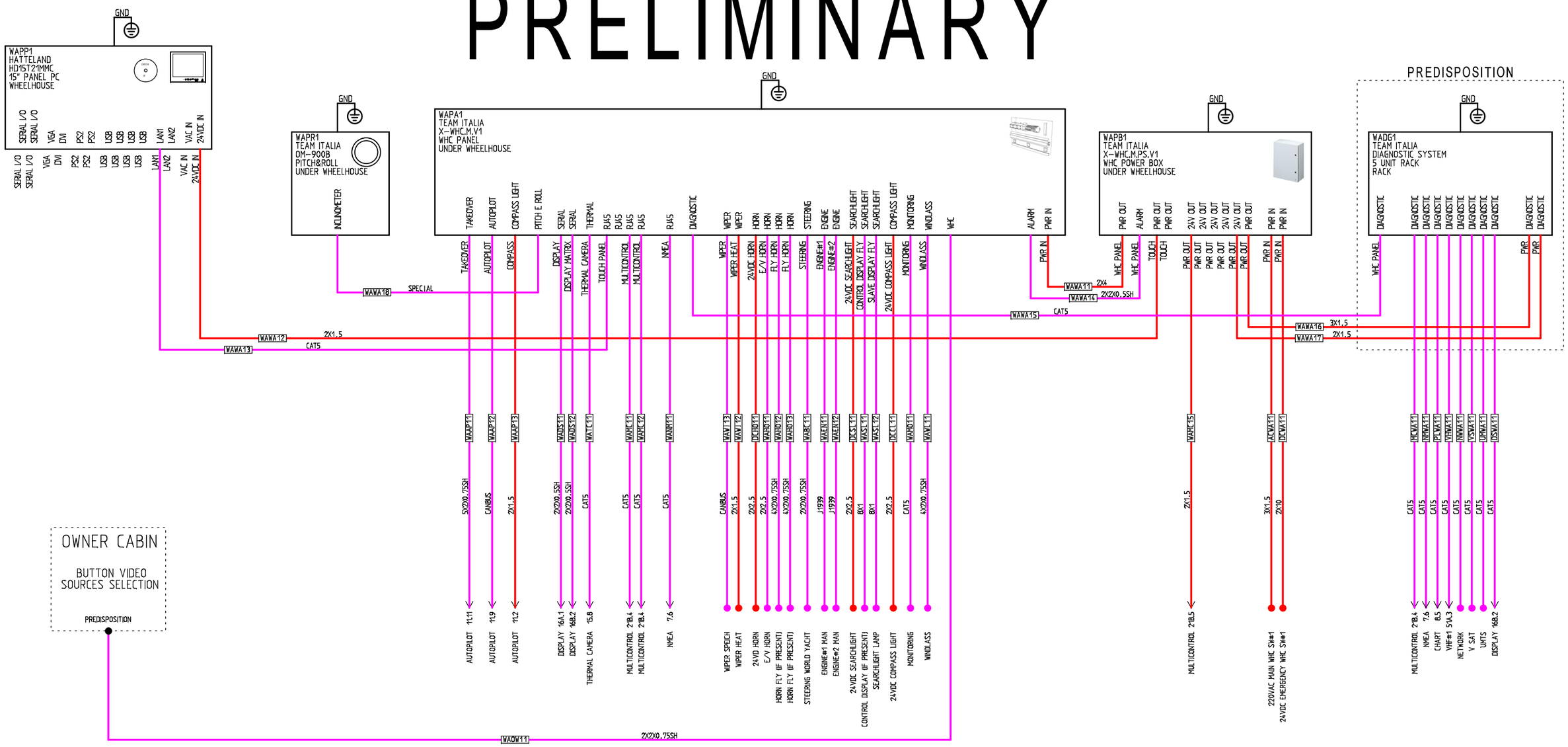

REVISIONE	MODIFICA
AF	
DATA	FIRMA
13/02/17	

TEAM Italia s.r.l.
Tecnologie Elettroniche per Applicazioni Marittime
Viareggio
www.team-italia.it

PROGETTO:	BM002 SCHEMATIC DIAGRAM AF
COMMESSA:	BM002
CLIENTE:	BENETTI
TITOLO:	WHC
DIS.:	DATA:

FOGLIO 20
DI 25
16B ◁ ▷ 21A

NB:
ALL EQUIPMENT MUST BE GROUNDED WITH CABLE 2,5 mm² MINIMUM

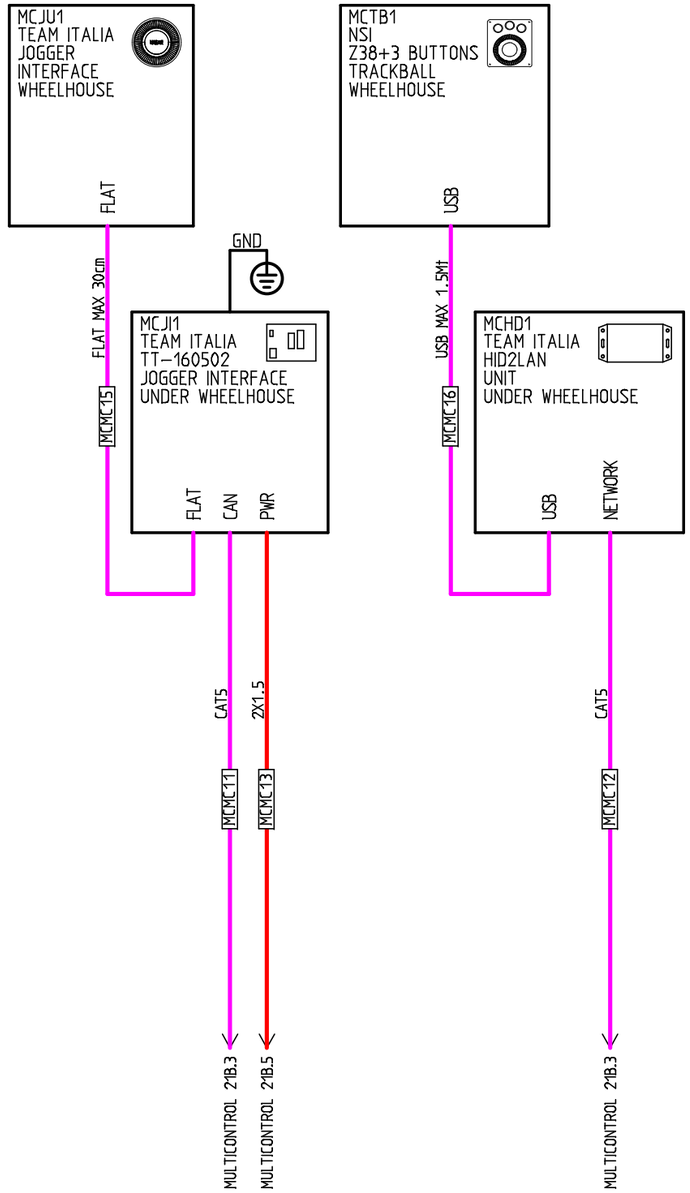

REVISIONE	MODIFICA				
AE		TEAM Italia s.r.l. Tecnologie Elettroniche per Applicazioni Marittime Viareggio www.team-italia.it	PROGETTO:	BM002 SCHEMATIC DIAGRAM AF	FOGLIO 21A
			COMMESSA:	BM002	DI 25
DATA 26/01/17	FIRMA		CLIENTE:	BENETTI	
			TITOLO:	MULTICONTROL	20 ◁ ▷ 21
			DIS.:	DATA:	

NB:
ALL EQUIPMENT MUST BE GROUNDED WITH CABLE 2,5 mm² MINIMUM

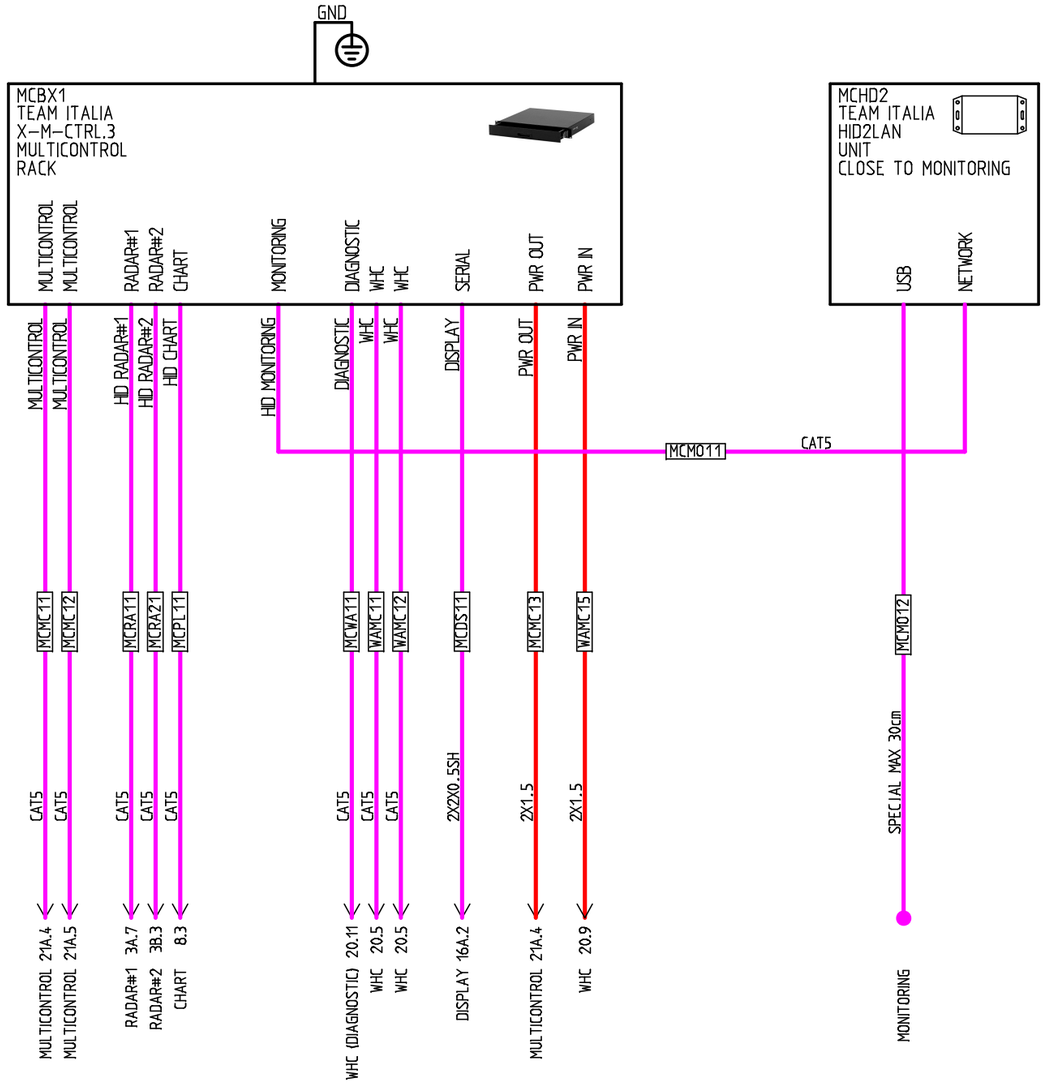

REVISIONE	MODIFICA		PROGETTO: BM002 SCHEMATIC DIAGRAM AF	FOGLIO 21B
AE		TEAM Italia s.r.l. Tecnologie Elettroniche per Applicazioni Marittime Viareggio www.team-italia.it	COMMESSA: BM002	DI 25
DATA 26/01/17	FIRMA		CLIENTE: BENETTI	21 ◁ ▷ 51
			TITOLO: MULTICONTROL	
			DIS.: DATA:	

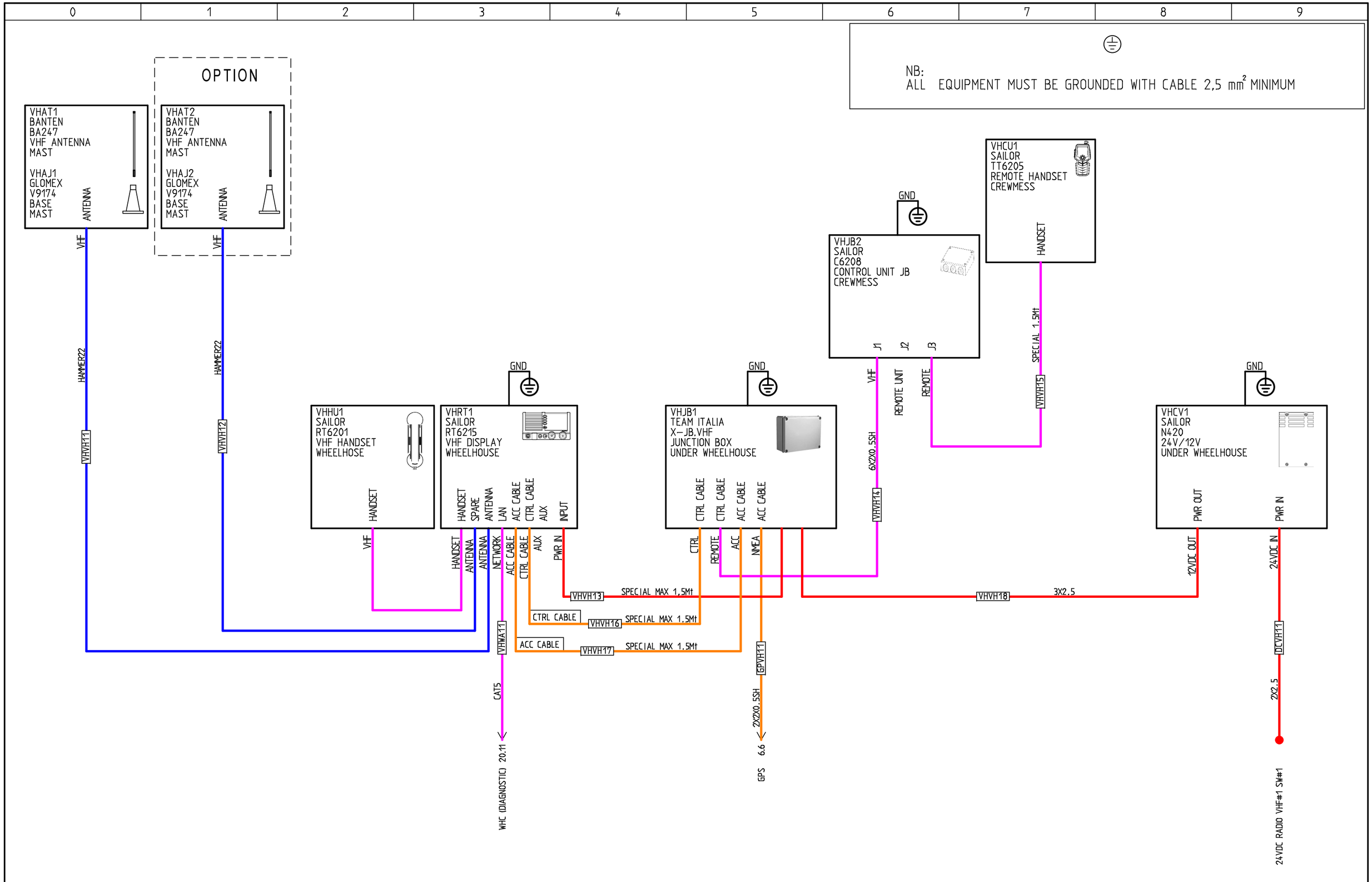

REVISIONE	MODIFICA		PROGETTO: BM002 SCHEMATIC DIAGRAM AF	FOGLIO 51A
AC		TEAM Italia s.r.l. Tecnologie Elettroniche per Applicazioni Marittime Viareggio www.team-italia.it	COMMESSA: BM002	DI 25
DATA 03/11/16	FIRMA		CLIENTE: BENETTI	21 ◁ ▷ 51
			TITOLO: VHF#1	
			DIS.: DATA:	

MARINE ELECTRONIC TECHNOLOGY APPLICATIONS

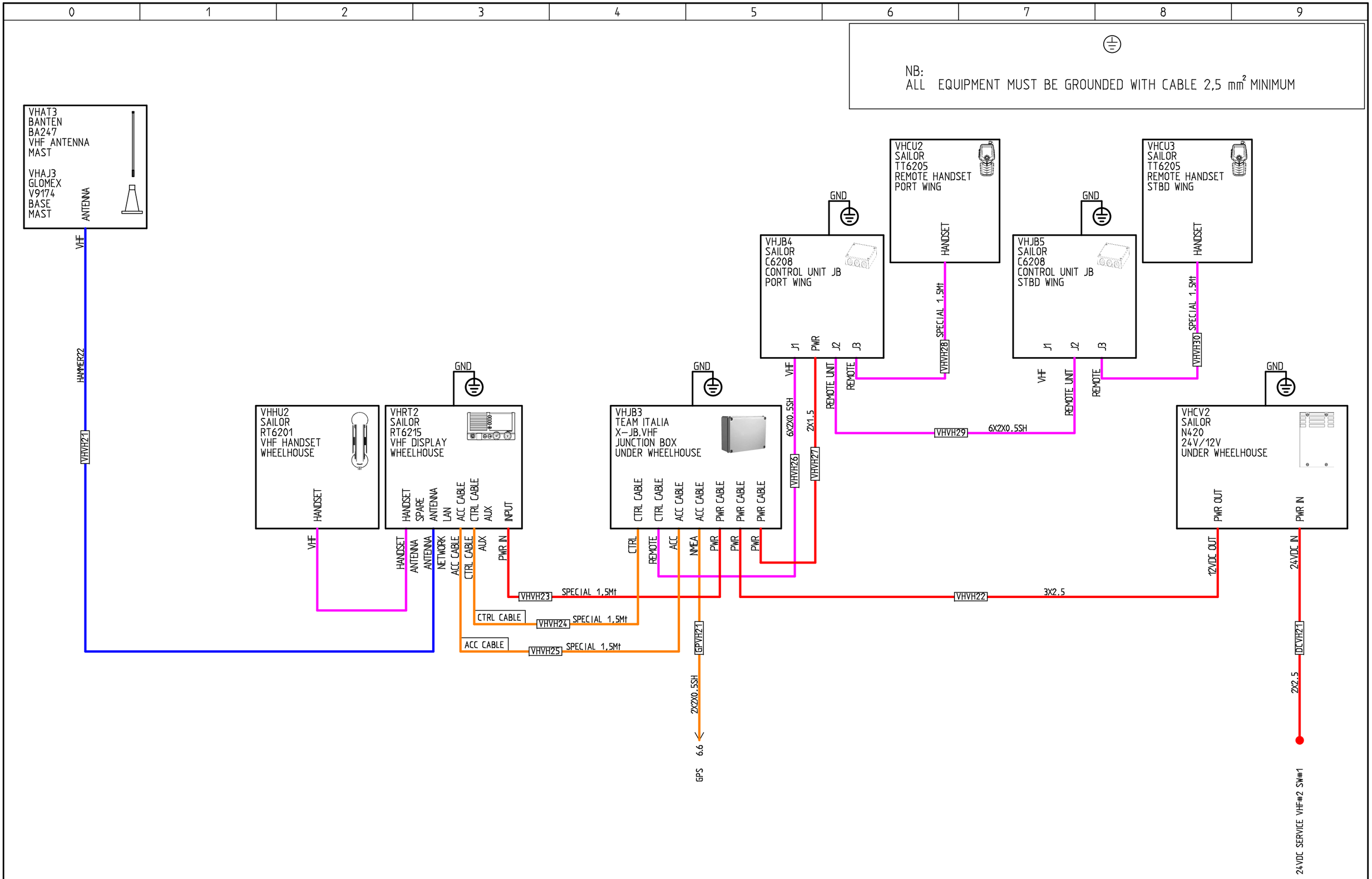

REVISIONE	MODIFICA		PROGETTO:	BM002 SCHEMATIC DIAGRAM AF	FOGLIO 51B
AD		TEAM Italia s.r.l. Tecnologie Elettroniche per Applicazioni Marittime Viareggio www.team-italia.it	COMMESSA:	BM002	DI 25
DATA	FIRMA		CLIENTE:	BENETTI	
23/11/16			TITOLO:	VHF#2	51 ◁ ▷ 52
			DIS.:	DATA:	

MARINE ELECTRONIC TECHNOLOGY APPLICATIONS

NB:
ALL EQUIPMENT MUST BE GROUNDED WITH CABLE 2,5 mm² MINIMUM

ONLY CABLE PREDISPOSITION

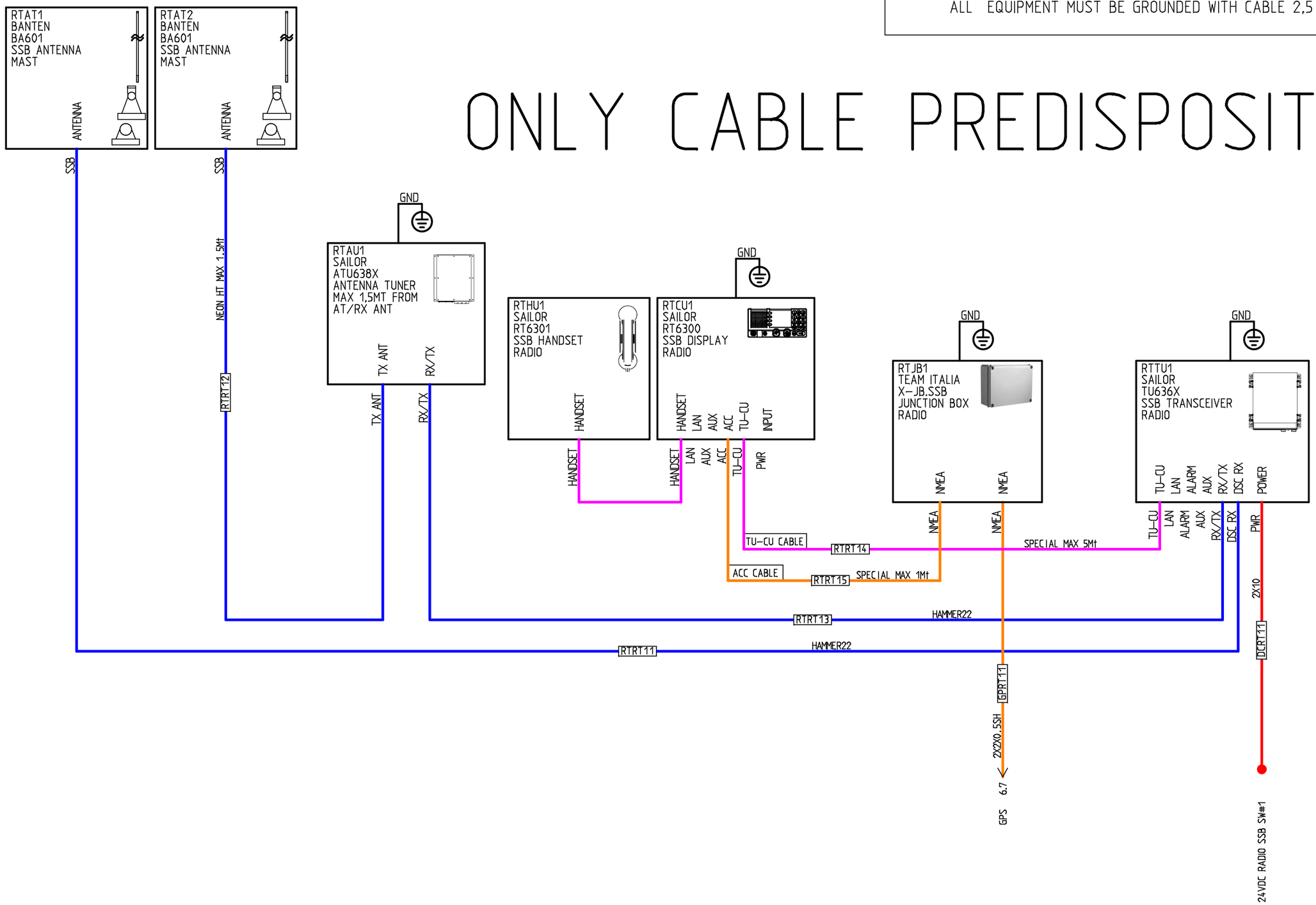

REVISIONE	MODIFICA		PROGETTO:	BM002 SCHEMATIC DIAGRAM AF	FOGLIO 52
AC		TEAM Italia s.r.l. Tecnologie Elettroniche per Applicazioni Marittime Viareggio www.team-italia.it	COMMESSA:	BM002	DI 25
			CLIENTE:	BENETTI	
DATA 03/11/16	FIRMA		TITOLO:	SSB	51 ◁ ▷ 56
			DIS.:	DATA:	

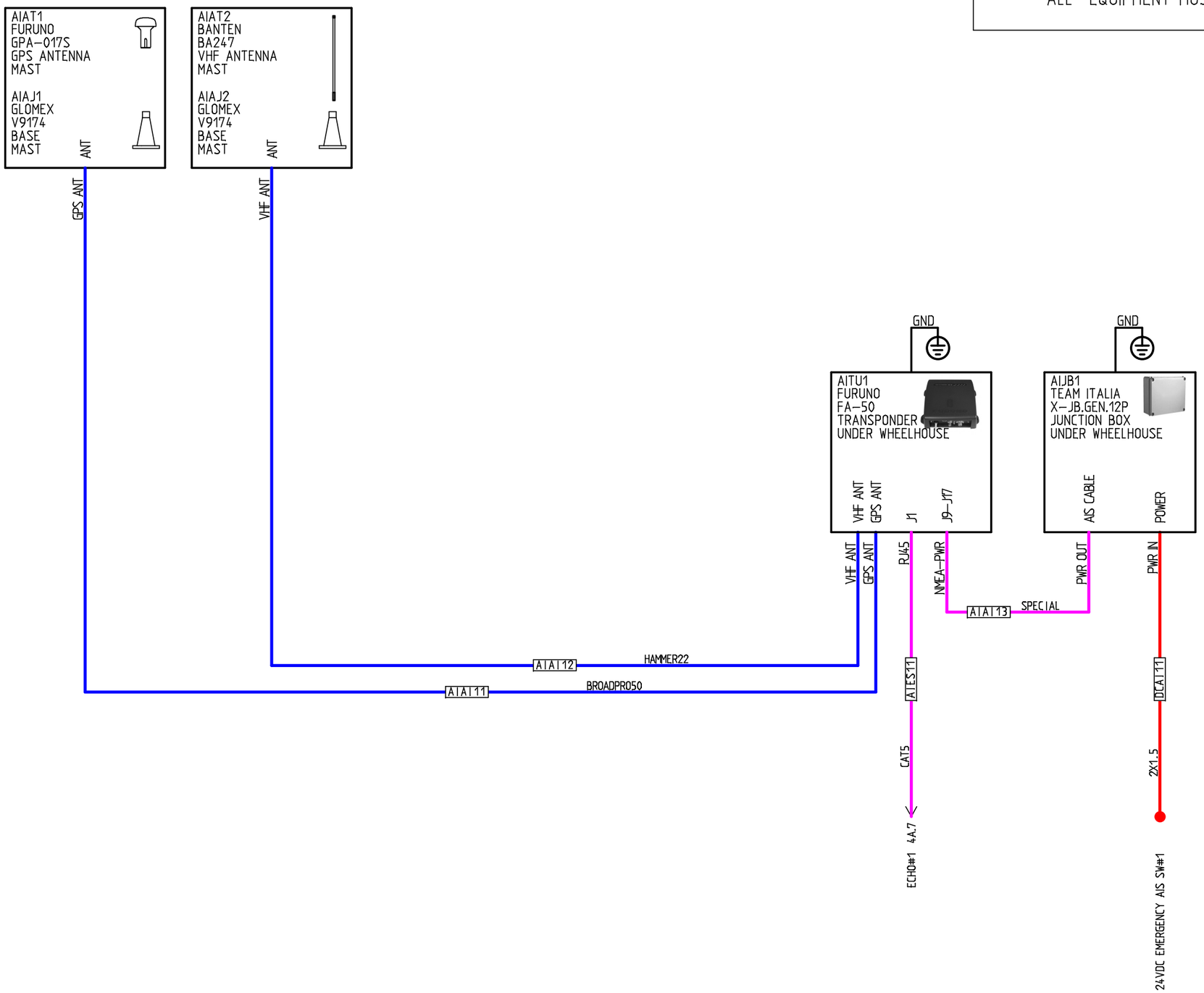

REVISIONE	MODIFICA		PROGETTO:	BM002 SCHEMATIC DIAGRAM AF	FOGLIO 56
AC		TEAM Italia s.r.l. Tecnologie Elettroniche per Applicazioni Marittime Viareggio www.team-italia.it	COMMESSA:	BM002	DI 25
DATA	FIRMA		CLIENTE:	BENETTI	
03/11/16			TITOLO:	AIS	52 ◁ ▷ 61
			DIS.:	DATA:	

MARINE ELECTRONIC TECHNOLOGY APPLICATIONS

NB:
ALL EQUIPMENT MUST BE GROUNDED WITH CABLE 2,5 mm² MINIMUM

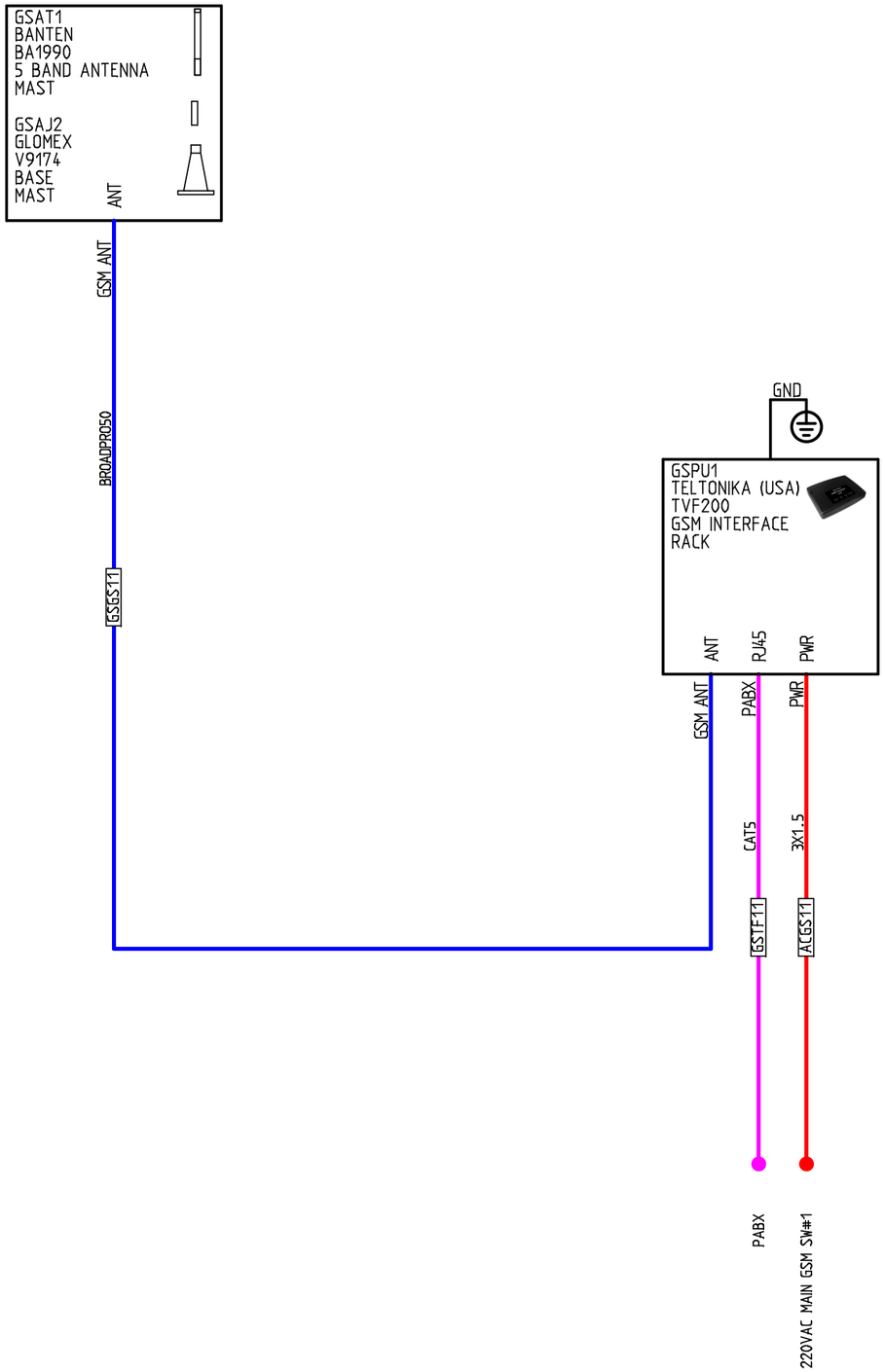

REVISIONE	MODIFICA		PROGETTO:	BM002 SCHEMATIC DIAGRAM AF	FOGLIO 61
AC		TEAM Italia s.r.l. Tecnologie Elettroniche per Applicazioni Marittime Viareggio www.team-italia.it	COMMESSA:	BM002	DI 25
DATA	FIRMA		CLIENTE:	BENETTI	
03/11/16			TITOLO:	GSM	56 ◁ ▷ 64
			DIS.:	DATA:	

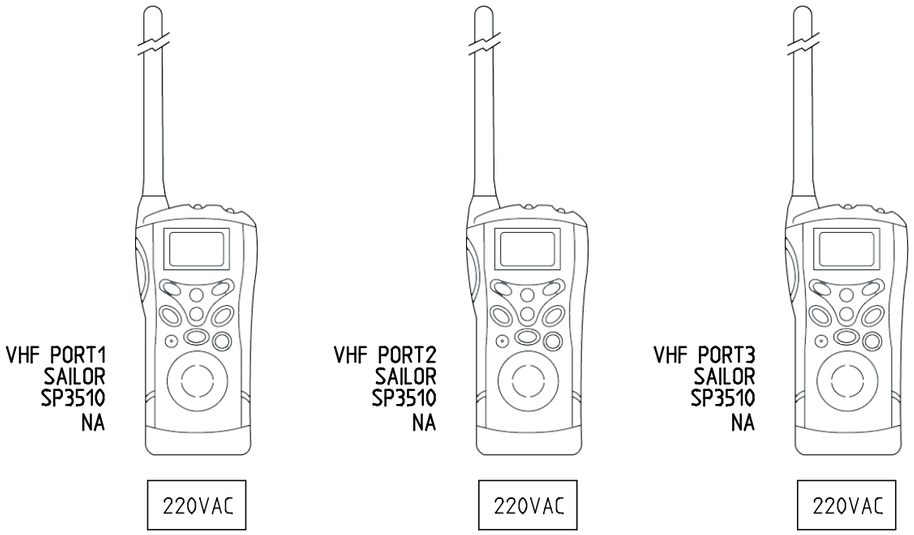

REVISIONE AC	MODIFICA	TEAM Italia s.r.l. Tecnologie Elettroniche per Applicazioni Marittime Viareggio www.team-italia.it	PROGETTO: BM002 SCHEMATIC DIAGRAM AF	FOGLIO 64
			COMMESSA: BM002	DI 25
			CLIENTE: BENETTI	
DATA 03/11/16	FIRMA		TITOLO: SAFETY SYSTEM	61 ◁ ▷ 99
			DIS.: DATA:	

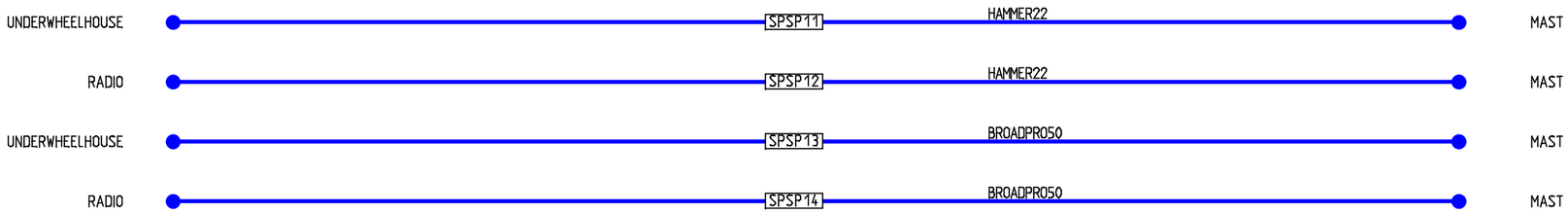

REVISIONE	MODIFICA			
AC		TEAM Italia s.r.l. Tecnologie Elettroniche per Applicazioni Marittime Viareggio www.team-italia.it	PROGETTO: BM002 SCHEMATIC DIAGRAM AF	FOGLIO 99
			COMMESSA: BM002	DI 25
DATA 03/11/16	FIRMA		CLIENTE: BENETTI	
			TITOLO: SPARE CABLE	64
			DIS.: DATA:	

List of Cables

Sheet (–)	Cable Name	Cable Type	Supply by /Std Lenght	From	To
3	RARA25	2X2.5	YARD	RAPU2:J1	RAJB2:POWER
3	RARA33	USB MAX 1.5Mt	TEAM	RAHD1:USB	RAPU1:J18
3	RARA43	USB MAX 1.5Mt	TEAM	RAHD2:USB	RAPU2:J18
3	MCRA11	CAT5	YARD	RAHD1:NETWORK	MCBX1:RADAR#1
3	RARA20	DROP MAX 6Mt	TEAM	RAPU2:J2	RATJ3:DROP
3	RAWS12	DROP MAX 6Mt	TEAM	RATJ1:DROP	WSRD1:NMEA 2K
3	RARA17	2X2.5	YARD	RAPS1:J1	RAJB1:POWER
3	RARA26	2X2.5	YARD	RAPS2:J1	RAJB2:POWER
3	RARA21	SPECIAL NN TZT	TEAM	RAAT2:ANTENNA	RAPS2:ANTENNA
3	RARA11	SPECIAL NN TZT	TEAM	RAAT1:ANTENNA	RAPS1:ANTENNA
3	DCRA21	2X2.5	YARD	RAJB2:POWER	24VDC SERVICE RADAR#2 SW#1
3	MCRA21	CAT5	YARD	RAHD2:NETWORK	MCBX1:RADAR#2
3	RARA23	SPECIAL MAX 5Mt	TEAM	RAPU2:J23	RASW2:PWR
3	RARA24	USB MAX 5Mt	TEAM	RAPU2:J17	RASW2:USB
3	RARA22	USB MAX 5Mt	TEAM	RAPU2:J20	RAKB2:USB
3	RARA16	2X2.5	YARD	RAPU1:J1	RAJB1:POWER
3	ESRA11	CAT5	YARD	RAPU1:J11	ESHB1:LAN2
3	RARA14	SPECIAL MAX 5Mt	TEAM	RAPU1:J23	RASW1:PWR
3	RARA15	USB MAX 5Mt	TEAM	RAPU1:J17	RASW1:USB
3	RARA13	USB MAX 5Mt	TEAM	RAPU1:J20	RAKB1:USB
3	RARA12	DROP MAX 6Mt	TEAM	RATJ4:DROP	RAPU1:J2
3	DCRA11	2X2.5	YARD	RAJB1:POWER	24VDC EMERGENCY RADAR#1 SW#1
4	AIES11	CAT5	YARD	ESHB1:LAN6	AITU1:J1
4	ESES12	3X2X0.75SH	YARD	ESJB1:ECHO#1	ESJB2:JB#2
4	ESES13	2X2X0.75SH	YARD	ESJB1:ECHO#1	ESJB2:JB#2
4	ESES14	MJ–A10SPF MAX 3.5m	TEAM	ESDF1:J4	ESJB2:DFF1
4	ESES15	MJ–A3SPF MAX 3.5m	TEAM	ESDF1:J4	ESJB2:DFF1
4	ESES16	CAT5	YARD	ESDF1:J5	ESHB1:LAN1

List of Cables

Sheet (–)	Cable Name	Cable Type	Supply by /Std Lenght	From	To
4	DCES11	2X1.5	YARD	ESDF1:J1	24VDC EMERGENCY ECHO#1 SW#1
4	ESES23	2X2X0.75SH	YARD	ESJB3:JBOX#3	ESJB4:JBOX#4
4	ESES21	SPECIAL ECHO	TEAM	ESJB3:SENSOR	ESTD2:TRANSDUCER
4	ESNM21	2X2X0.5SH	TEAM	ESJB4:NMEA	NMJB1:IN4
4	ESRA12	CAT5	YARD	ESHB1:LAN3	RAPS1:J2
4	ESES22	3X2X0.75SH	YARD	ESJB4:JBOX#4	ESJB3:JBOX#3
4	DCES12	2X1.5	YARD	ESHB1:PWR	24VDC EMERGENCY ECHO#1 SW#1
4	ESRA22	CAT5	YARD	ESHB1:LAN5	RAPS2:J2
4	ESES11	SPECIAL ECHO	TEAM	ESTD1:TRANSDUCER	ESJB1:ECHO#1
4	ESRA21	CAT5	YARD	ESHB1:LAN4	RAPU2:J12
4	ESPL11	CAT5	YARD	ESHB1:LAN7	PLPC1:LAN 1
4	DCES21	2X1.5	YARD	ESJB4:PWR	24VDC SERVICE ECHO#2 SW#1
6	GPGP11	6X2X0.5SH	TEAM	GPAT1:ANT	GPJB1:NMEA IN
6	GPNM11	2X2X0.5SH	TEAM	GPJB1:NMEA OUT	NMJB1:IN0
6	GPGP12	2X2X0.5SH	TEAM	GPJB1:NMEA OUT	GPJB2:IN 1
6	DCGP11	2X1.5	YARD	GPJB2:PWR 1	24VDC RADIO GPS SW#1
6	GPPL11	2X2X0.5SH	TEAM	GPJB2:OUT 2A	PLPC1:SERIAL
6	GPRT11	2X2X0.5SH	TEAM	GPJB2:OUT 1D	RTJB1:NMEA
6	GPGB11	2X2X0.5SH	TEAM	GPJB2:OUT 1C	GBJB2:NMEA IN
6	GPGP13	2X1.5	YARD	GPJB1:PWR	GPJB2:PWR 1
7	GBNM11	2X2X0.5SH	TEAM	NMJB1:IN2	GBJB3:OUT 1B
7	NMPL11	2X2X0.5SH	TEAM	NMJB1:OUT4	PLPC1:SERIAL
7	NMTC11	2X2X0.5SH	TEAM	NMJB1:OUT4	TCCM1:NMEA
7	NMMO11	2X2X0.5SH	TEAM	NMJB1:OUT7	MONITORING
7	NMWA11	CAT5	YARD	NMJB1:LAN	WADG1:DIAGNOSTIC
7	DCNM11	2X1.5	YARD	NMJB1:POWER	24VDC SERVICE NMEA SW#1
7	RANM11	DROP MAX 1.5Mt	TEAM	NMAS1:NMEA2000	RATJ2:DROP
7	NMNM11	SPECIAL MAX 1.5Mt	TEAM	NMJB1:IN7	NMAS1:NMEA0183

List of Cables

Sheet (–)	Cable Name	Cable Type	Supply by /Std Lenght	From	To
8	DCPL11	2X1.5	YARD	PLPC1:PWR	24VDC SERVICE CHART SW#1
8	PLPL12	USB MAX 1.5Mt	TEAM	PLHD1:USB	PLPC1:USB
10	NMWS12	CAT5	YARD	PORT WING	NMJB1:OUT5
10	NMWS11	CAT5	YARD	WHEELHOUSE	NMJB1:OUT5
10	WSWS18	DROP MAX 6Mt	TEAM	WSTJ1:DROP	WSRD2:NMEA 2K
10	DCWS11	2X1.5	YARD	24VDC SERVICE WIND SW#1	WSJB1:PWR IN
10	WSNM11	2X2X0.5SH	TEAM	WSJB1:NMEA	NMJB1:IN6
10	DCWS12	2X1.5	YARD	24VDC SERVICE WIND SW#2	WHEELHOUSE
10	RAWS11	CANBUS 2X2XAWG22	TEAM	WSTJ1:NMEA2K	RATJ1:NMEA2K
10	DCWS13	2X1.5	YARD	PORT WING	24VDC SERVICE WIND SW#3
10	NMWS13	CAT5	YARD	STBD WING	NMJB1:OUT5
10	DCWS14	2X1.5	YARD	STBD WING	24VDC SERVICE WIND SW#4
10	WSWS19	DROP MAX 6Mt	TEAM	WSRD3:NMEA 2K	WSTJ2:DROP
10	WSWS11	6X2X0.5SH	TEAM	WSWS1:ANT	WSJB1:SENSOR
10	RAWS13	CANBUS 2X2XAWG22	TEAM	WSTJ2:NMEA2K	RATJ4:NMEA2K
11	APAP22	5X2X0.75SH	YARD	APJI1:X8	APJB1:SIN–COS
11	APAP18	4X1.5	YARD	APSC2:RUDD CMD#2	APTK1:A/P SOL#2
11	APAP16	CANBUS	TEAM	APSC1:CAN#1	APSC2:BUS1
11	APAP14	2X1.5	YARD	APSC1:APH POWER	APDU1:POWER
11	APAP31	2X2X0.5SH	TEAM	APSC1:GYRO#2	APJI1:X5
11	PLAP11	2X2X0.5SH	TEAM	APSC1:RADAR	PLPC1:SERIAL
11	APAP30	2X2X0.75SH	YARD	APTI1:X1	MANUAL STEERING
11	APAP23	SPECIAL	TEAM	APJB1:LAMP	APJP1:JUPITER
11	APAP15	CANBUS	TEAM	APSC1:CAN#1	APDU1:CAN
11	APAP17	4X2X0.75SH	YARD	APSC2:TAKEOVER	APTK1:TAKEOVER
11	APAP12	2X1.5	YARD	APSC2:PWR OUT	APSC1:POWER
11	APAP19	4X1.5	YARD	APSC2:RUDD CMD#1	APTK1:A/P SOL#1
11	NMAP11	2X2X0.5SH	TEAM	APSC1:GPS	NMJB1:OUT2

List of Cables

Sheet (–)	Cable Name	Cable Type	Supply by /Std Lenght	From	To
11	APAP21	2X2X0.75SH	YARD	APSC2:AIN#1	APFB1:FDBK
11	APAP29	4X2X0.75SH	YARD	APTK1:STEERING#1	MANUAL STEERING TAKEOVER
11	APAP28	4X1.5	YARD	APTK1:E/V SOL#1	MANUAL STEERING E/V PUMP#1
11	APAP27	4X1.5	YARD	APTK1:E/V SOL#2	MANUAL STEERING E/V PUMP#2
11	APAP26	2X4	YARD	APTK1:PWR PUMP#1	24VDC PUMP#1
11	APAP11	2X1.5	YARD	APTK1:POWER	APSC2:PWR OUT
11	APAP25	2X4	YARD	24VDC PUMP#2	APTK1:PWR PUMP#2
11	DCAP11	2X1.5	YARD	APSC2:PWR IN	24VDC SERVICE AUTOPILOT SW#1
11	APAP13	2X1.5	YARD	APSC1:POWER	APJI1:X7
11	APAP24	SPECIAL	TEAM	APFX1:FLUXGATE	APJB1:FLUXGATE
11	APAP20	2X2X0.75SH	YARD	APFB1:FDBK	APTK1:OPTION
12	GBGB16	3X2X0.5SH	TEAM	GBJB1:NMEA	GBJB2:NMEA
12	GBGB18	2X2X0.5SH	TEAM	GBJB2:NMEA	GBJB3:IN 1
12	GBAP11	2X2X0.5SH	TEAM	GBJB2:NMEA	APSC1:GYRO#1
12	GBGB14	2X1.5	YARD	GBJB2:POWER	GBJB1:PWR
12	DCGB11	2X1.5	YARD	GBJB3:PWR 1	24VDC EMERGENCY FLUXGATE SW#1
12	GBTS11	2X2X0.5SH	TEAM	GBJB3:OUT 1D	TV SAT
12	GBVS11	2X2X0.5SH	TEAM	GBJB3:OUT 1C	V SAT
12	GBGB15	3X2X0.5SH	TEAM	GBJB1:NMEA	GBJB2:NMEA
12	GBGB13	SPECIAL MAX 2Mt	TEAM	GBJB1:FLUXGATE	GBFX1:POWER
12	GBGB12	SPECIAL MAX 2Mt	TEAM	GBFX1:NMEA	GBJB1:FLUXGATE
12	GBGB11	SPECIAL MAX 2Mt	TEAM	GBFX1:AD10	GBJB1:FLUXGATE
12	GBGB17	2X1.5	YARD	GBJB2:PWR	GBJB3:PWR 1
12	GBPL11	2X2X0.5SH	TEAM	GBJB3:OUT 1A	PLPC1:SERIAL
15	TCDS11	HDMI–DVI MAX 5Mt	TEAM	TCCV1:HDMI OUT	DSVM1:IN 5
15	TCTC13	CAT5	YARD	TCCU1:LAN	TCJB1:POE ADAP
15	TCTC11	CAT6	YARD	TCCM1:LAN	TCJB1:POE ADAP
15	TCDS12	HDMI–DVI MAX 5Mt	TEAM	TCCV2:HDMI OUT	DSVM1:IN 6

List of Cables

Sheet (–)	Cable Name	Cable Type	Supply by /Std Lenght	From	To
15	DCTC11	2X2.5	YARD	24VDC SERVICE THERMAL SW#1	TCJB1:PWR IN
15	TCRA11	RG6	TEAM	TCCV1:PAL IN	TCCM1:VIDEO IR
15	TCRA12	RG6	TEAM	TCCM1:VIDEO VIS/IR	TCCV2:PAL IN
15	TCTC12	2X2.5	YARD	TCCM1:POWER	TCJB1:PWR OUT
16	PLDS12	VGA	TEAM	DSDU3:VGA	PLPC1:VGA
16	DCDS11	2X1.5	YARD	DSDU1:24VDC IN	24VDC EMERGENCY RADAR#1 SW#2
16	DCDS12	2X1.5	YARD	DSDU2:24VDC IN	24VDC FROM MONITORING
16	MODS12	VGA	TEAM	DSDU2:VGA	MONITORING
16	DSDS15	DVI MAX 5Mt	TEAM	DSDU2:DVI	DSVM1:OUT 2
16	DSDS13	2X2X0.5SH	TEAM	DSDU3:SERIAL I/O	DSDU4:SERIAL I/O
16	ACDS13	3X1.5	YARD	DSDU3:VAC IN	220VAC MAIN DISPLAY SW#3
16	DSDS12	2X2X0.5SH	TEAM	DSDU2:SERIAL I/O	DSDU3:SERIAL I/O
16	DCDS14	2X1.5	YARD	24VDC SERVICE DISPLAY SW#4	DSDU4:24VDC IN
16	DSDS11	2X2X0.5SH	TEAM	DSDU1:SERIAL I/O	DSDU2:SERIAL I/O
16	DSDS16	DVI MAX 5Mt	TEAM	DSDU3:DVI	DSVM1:OUT 3
16	ACDS14	3X1.5	YARD	DSDU4:VAC IN	220VAC MAIN DISPLAY SW#4
16	DSDS17	DVI MAX 5Mt	TEAM	DSDU4:DVI	DSVM1:OUT 4
16	ACDS15	3X1.5	YARD	DSSW1:IN	220VAC MAIN DISPLAY SW#5
16	DSDS18	SPECIAL MAX 1Mt	TEAM	DSIN1:24VDC IN	DSJB1:PWR OUT
16	DCDS15	2X6	YARD	DSJB1:PWR IN	24VDC SERVICE DISPLAY SW#5
16	RADS11	DVI MAX 5Mt	TEAM	DSVM1:IN 1	RAPU1:J15
16	DCDS13	2X1.5	YARD	DSDU3:24VDC IN	24VDC SERVICE DISPLAY SW#3
16	DSDS21	3X1.5	YARD	DSVM1:POWER	DSPS1:POWER OUT
16	ACDS11	3X1.5	YARD	DSDU1:VAC IN	220VAC MAIN DISPLAY SW#1
16	TCDS13	3X1.5	YARD	DSPS1:POWER OUT	TCCV1:POWER
16	DSDS20	3X1.5	YARD	DSPS1:POWER IN	DSSW1:OUT
16	RAOW11	BC–DGKAT623 AWG70	TEAM	RACV2:CAT OUT	OWNER TV
16	TCDS14	3X1.5	YARD	DSPS1:POWER OUT	TCCV2:POWER

List of Cables

Sheet (–)	Cable Name	Cable Type	Supply by /Std Lenght	From	To
16	RADS21	DVI MAX 5Mt	TEAM	DSVM1:IN 2	RAPU2:J15
16	ACDS12	3X1.5	YARD	DSDU2:VAC IN	220VAC MAIN DISPLAY SW#2
16	DSDS24	DVI MAX 5Mt	TEAM	DSVM1:OUT 5	RACV1:DVI IN
16	MCDS11	2X2X0.5SH	TEAM	DSDU1:SERIAL I/O	MCBX1:SERIAL
16	MODS11	DVI MAX 5Mt	TEAM	DSVM1:IN 4	MONITORING
16	PLDS11	DVI MAX 5Mt	TEAM	DSVM1:IN 3	PLPC1:DVI
16	DSDS22	3X1.5	YARD	RACV2:POWER	DSPS1:POWER OUT
16	RACA11	BC–DGKAT623 AWG70	TEAM	RACV1:CAT OUT	CAPTAIN TV
16	DSDS23	3X1.5	YARD	RACV1:POWER	DSPS1:POWER OUT
16	DSDS19	3X1.5	YARD	DSSW1:IN	DSIN1:220VAC OUT
16	WADS11	2X2X0.5SH	TEAM	DSDU1:SERIAL I/O	WAPA1:SERIAL
16	DSDS14	DVI MAX 5Mt	TEAM	DSDU1:DVI	DSVM1:OUT 1
16	DSDS25	DVI MAX 5Mt	TEAM	DSVM1:OUT 6	RACV2:DVI IN
20	WAHO11	2X2.5	YARD	WAPA1:HORN	E/V HORN
20	WAMC15	2X1.5	YARD	WAPB1:24V OUT	MCBX1:PWR IN
20	WAWI13	CANBUS	YARD	WAPA1:WIPER	WIPER SPEICH
20	WATC11	CAT5	YARD	WAPA1:THERMAL	TCJB1:SWITCH
20	WADS12	2X2X0.5SH	TEAM	WAPA1:SERIAL	DSVM1:RS232
20	WAWL11	4X2X0.75SH	YARD	WAPA1	WINDLASS
20	WAOW11	2X2X0.75SH	YARD	WAPA1:WHC	PREDISPOSITION
20	WAMC12	CAT5	YARD	WAPA1:RJ45	MCBX1:WHC
20	WAWA18	SPECIAL	TEAM	WAPA1:PITCH E ROLL	WAPR1:INCLINOMETER
20	WAWA14	2X2X0.5SH	TEAM	WAPB1:ALARM	WAPA1:ALARM
20	WAWA12	2X1.5	YARD	WAPB1:PWR OUT	WAPP1:24VDC IN
20	WAWI12	2X1.5	YARD	WAPA1:WIPER	WIPER HEAT
20	DCWA11	2X10	YARD	WAPB1:PWR IN	24VDC EMERGENCY WHC SW#1
20	UMWA11	CAT5	YARD	WADG1:DIAGNOSTIC	UMTS
20	ACWA11	3X1.5	YARD	WAPB1:PWR IN	220VAC MAIN WHC SW#1

List of Cables

Sheet (–)	Cable Name	Cable Type	Supply by /Std Lenght	From	To
20	WAWA17	2X1.5	YARD	WAPB1:24V OUT	WADG1:DIAGNOSTIC
20	MCWA11	CAT5	YARD	WADG1:DIAGNOSTIC	MCBX1:DIAGNOSTIC
20	WAWA15	CAT5	YARD	WADG1:DIAGNOSTIC	WAPA1:DIAGNOSTIC
20	PLWA11	CAT5	YARD	WADG1:DIAGNOSTIC	PLPC1:LAN 2
20	NWWA11	CAT5	YARD	WADG1:DIAGNOSTIC	NETWORK
20	DSWA11	CAT5	YARD	WADG1:DIAGNOSTIC	DSVM1:LAN
20	WAEN12	J1939	YARD	WAPA1:ENGINE	ENGINE#2 MAN
20	WAWA16	3X1.5	YARD	WADG1:DIAGNOSTIC	WAPB1:PWR OUT
20	VSWA11	CAT5	YARD	V SAT	WADG1:DIAGNOSTIC
20	WAHO12	4X2X0.75SH	YARD	HORN FLY (IF PRESENT)	WAPA1:HORN
20	WANM11	CAT5	YARD	WAPA1:RJ45	NMJB1:RS232
20	WAHO13	4X2X0.75SH	YARD	WAPA1:HORN	HORN FLY (IF PRESENT)
20	WAAP11	5X2X0.75SH	YARD	WAPA1:TAKEOVER	APTK1:WHC I/O
20	WAAP13	2X1.5	YARD	WAPA1:COMPASS LIGHT	APJB1:WHC
20	WAWA13	CAT5	YARD	WAPA1:RJ45	WAPP1:LAN1
20	WAMC11	CAT5	YARD	WAPA1:RJ45	MCBX1:WHC
20	WAWA11	2X4	YARD	WAPA1:PWR IN	WAPB1:PWR OUT
20	DCSL11	2X2.5	YARD	WAPA1:SEARCHLIGHT	24VDC SEARCHLIGHT
20	DCCL11	2X2.5	YARD	WAPA1:COMPASS LIGHT	24VDC COMPASS LIGHT
20	WAAP12	CANBUS	TEAM	WAPA1:AUTOPILOT	APSC2
20	WASL11	8X1	YARD	WAPA1:SEARCHLIGHT	CONTROL DISPLAY (IF PRESENT)
20	DCHO11	2X2.5	YARD	WAPA1:HORN	24VD HORN
20	WABC11	2X2X0.75SH	YARD	WAPA1:STEERING	STEERING WORLD YACHT
20	WAMO11	CAT5	YARD	WAPA1:MONITORING	MONITORING
20	WAEN11	J1939	YARD	WAPA1:ENGINE	ENGINE#1 MAN
20	WASL12	8X1	YARD	WAPA1:SEARCHLIGHT	SEARCHLIGHT LAMP
21	MCMC12	CAT5	YARD	MCHD1:NETWORK	MCBX1:MULTICONTROL
21	MCMC13	2X1.5	YARD	MCBX1:PWR OUT	MCJI1:PWR

List of Cables

Sheet (–)	Cable Name	Cable Type	Supply by /Std Lenght	From	To
21	MCMC16	USB MAX 1.5Mt	TEAM	MCTB1:USB	MCHD1:USB
21	MCMC15	FLAT MAX 30cm	TEAM	MCJU1:FLAT	MCJI1:FLAT
21	MCMO12	SPECIAL MAX 30cm	TEAM	MCHD2:USB	MONITORING
21	MCMO11	CAT5	YARD	MCBX1:MONITORING	MCHD2:NETWORK
21	MCPL11	CAT5	YARD	MCBX1:CHART	PLHD1:NETWORK
21	MCMC11	CAT5	YARD	MCBX1:MULTICONTROL	MCJI1:CAN
51	GPVH11	2X2X0.5SH	TEAM	VHJB1:ACC CABLE	GPJB2:OUT 1A
51	VHVH17	SPECIAL MAX 1.5Mt	TEAM	VHRT1:ACC CABLE	VHJB1:ACC CABLE
51	VHVH27	2X1.5	YARD	VHJB3:PWR CABLE	VHJB4:PWR
51	VHVH18	3X2.5	YARD	VHJB1	VHCV1:PWR OUT
51	VHVH12	HAMMER22	TEAM	VHAT2:ANTENNA	VHRT1:SPARE
51	VHVH15	SPECIAL 1.5Mt	TEAM	VHJB2:J3	VHCU1:HANDSET
51	DCVH11	2X2.5	YARD	VHCV1:PWR IN	24VDC RADIO VHF#1 SW#1
51	VHVH22	3X2.5	YARD	VHJB3:PWR CABLE	VHCV2:PWR OUT
51	VHVH16	SPECIAL MAX 1.5Mt	TEAM	VHRT1:CTRL CABLE	VHJB1:CTRL CABLE
51	GPVH21	2X2X0.5SH	TEAM	VHJB3:ACC CABLE	GPJB2:OUT 1B
51	VHVH13	SPECIAL MAX 1,5Mt	TEAM	VHRT1:INPUT	VHJB1
51	VHWA11	CAT5	YARD	VHRT1:LAN	WADG1:DIAGNOSTIC
51	VHVH26	6X2X0.5SH	TEAM	VHJB3:CTRL CABLE	VHJB4:J1
51	VHVH11	HAMMER22	TEAM	VHRT1:ANTENNA	VHAT1:ANTENNA
51	VHVH14	6X2X0.5SH	TEAM	VHJB1:CTRL CABLE	VHJB2:J1
51	VHVH23	SPECIAL 1,5Mt	TEAM	VHRT2:INPUT	VHJB3:PWR CABLE
51	VHVH25	SPECIAL 1,5Mt	TEAM	VHRT2:ACC CABLE	VHJB3:ACC CABLE
51	VHVH24	SPECIAL 1,5Mt	TEAM	VHRT2:CTRL CABLE	VHJB3:CTRL CABLE
51	DCVH21	2X2.5	YARD	VHCV2:PWR IN	24VDC SERVICE VHF#2 SW#1
51	VHVH28	SPECIAL 1.5Mt	TEAM	VHJB4:J3	VHCU2:HANDSET
51	VHVH30	SPECIAL 1.5Mt	TEAM	VHJB5:J3	VHCU3:HANDSET
51	VHVH29	6X2X0.5SH	TEAM	VHJB4:J2	VHJB5:J2

List of Cables

Sheet (–)	Cable Name	Cable Type	Supply by /Std Lenght	From	To
51	VHVH21	HAMMER22	TEAM	VHRT2:ANTENNA	VHAT3:ANTENNA
52	RTRT12	NEON HT MAX 1.5Mt	TEAM	RTAT2:ANTENNA	RTAU1:RX/TX
52	DCRT11	2X10	YARD	RTTU1:POWER	24VDC RADIO SSB SW#1
52	RTRT14	SPECIAL MAX 5Mt	TEAM	RTCU1:TU–CU	RTTU1:TU–CU
52	RTRT15	SPECIAL MAX 1Mt	TEAM	RTCU1:ACC	RTJB1:NMEA
52	RTRT13	HAMMER22	TEAM	RTAU1:TX ANT	RTTU1:RX/TX
52	RTRT11	HAMMER22	TEAM	RTTU1:DSC RX	RTAT1:ANTENNA
56	DCAI11	2X1.5	YARD	24VDC EMERGENCY AIS SW#1	AIJB1:POWER
56	AIAI12	HAMMER22	TEAM	AIAT2:ANT	AITU1:VHF ANT
56	AIAI11	BROADPRO50	TEAM	AIAT1:ANT	AITU1:GPS ANT
56	AIAI13	SPECIAL	TEAM	AITU1:J9–J17	AIJB1:AIS CABLE
61	ACGS11	3X1.5	YARD	GSPU1:PWR	220VAC MAIN GSM SW#1
61	GSTF11	CAT5	YARD	GSPU1:RJ45	PABX
61	GSGS11	BROADPRO50	TEAM	GSAT1:ANT	GSPU1:ANT
99	SPSP11	HAMMER22	TEAM	UNDERWHEELHOUSE	MAST
99	SPSP12	HAMMER22	TEAM	RADIO	MAST
99	SPSP13	BROADPRO50	TEAM	UNDERWHEELHOUSE	MAST
99	SPSP14	BROADPRO50	TEAM	RADIO	MAST

REVISIONE	MODIFICA
DATA	FIRMA

MARINE ELECTRONIC TECHNOLOGY APPLICATIONS

TEAM Italia s.r.l.
Tecnologie Elettroniche per Applicazioni Marittime
Viareggio
www.team-italia.it

i-BRIDGE

PROGETTO:	BM002 SCHEMATIC DIAGRAM AF
COMMESSA:	BM002
CLIENTE:	BENETTI
TITOLO:	
DIS.:	DATA:

FOGLIO 9
DI 9

8

Costruzione:	BM002	REV:	AG	NOTA: L'INDICAZIONE NA (NOT APPLICABLE) INDICA COMPONENTE INTERNO AD UN APPARATO. PERTANTO NON E' DA CONSIDERARE NEL POSIZIONAMENTO GENERALE.	Data:	13/02/2017

LEGENDA COLORI	
	ULTIMA REVISIONE
	PARTI DA DEFINIRE
	PARTI ELIMINATE ULTIMA REVISIONE
	PREDISPOSIZIONE/OPTION

Note:
REV AB: UPDATED TEAM ITALIA JUNCTION BOXES, UPDATED WHC SYSTEM AND ADDED DIAGNOSTIC SYSTEM
REV AC: ADDED RACK FOR YARD USE
REV AD: GENERAL REVIEW OF SCHEMATIC DIAGRAM
REV AE: UPDATED VHF#2 POSITION, ADDED VIDEO SIGNAL TO OWNER TV AND CAPTAIN TV, UPDATED POSITION OF RADARS SWITCH BOX.
REV AF: ADDED MULTICONTROL SYSTEM, ADDED VIDEO MATRIX SYSTEM, CONFIRMED THERMAL CAMERA AND UPDATED WIRING, ADDED PITCH&ROLL IN WHC SYSTEM
REV AG: ADDED THERMAL CAMERA INTEGRATION WITH WHC

SISTEMA	TAG	MARCA	MODELLO	DESCRIZIONE	PESO	DIMENSIONI LXAXP	POSIZIONE	TENSIONE	ASSORBIMENTO	DISSIPAZIONE	RIFERIMENTO LISTA PARTI	RIFERIMENTO SCHEMI
~~RADAR~~	~~RADS1~~	~~HATTELAND~~	~~HD15T21STD~~	~~DISPLAY UNIT 15" SERIE X~~	~~6KG~~	~~356X307X74~~	~~WHEELHOUSE~~	24VDC EMERG. RADAR SW#1 220VAC MAIN RADAR SW#1	60W	204BTU/H	REV AD	REV AC
~~RADAR~~	~~RADS2~~	~~HATTELAND~~	~~HD15T21STD~~	~~DISPLAY UNIT 15" SERIE X~~	~~6KG~~	~~356X307X74~~	~~WHEELHOUSE~~	24VDC EMERGENCY RADAR SW#2 220VAC MAIN RADAR SW#2	60W	204BTU/H	REV AD	REV AC
~~RADAR~~	~~RAAT1~~	~~FURUNO~~	~~DRS-6A 4FT~~	~~NAVNET 3D ANTENNA 12KW 4FT~~	~~22KG~~	~~NA~~	~~MAST~~	24VDC EMERGENCY RADAR SW#1	150W	NA	REV AD	REV AC
~~RADAR~~	~~RACU1~~	~~FURUNO~~	~~MCU001~~	~~NAVNET 3D KEYBOARD~~	~~1KG~~	~~293X100X36~~	~~WHEELHOUSE~~			5BTU/H	REV AD	REV AC
~~RADAR~~	~~RAPU1~~	~~FURUNO~~	~~MPU001~~	~~NAVNET 3D PROCESSOR~~	~~15KG~~	~~376X430X184~~	~~UNDER WHEELHOUSE~~			360BTU/H	REV AD	REV AC
~~RADAR~~	~~RAJB1~~	~~TEAM ITALIA~~	~~19X14X7 JB NN3D~~	~~19X14X7 JUNCTION BOX NAVNET 3D~~	~~0,5KG~~	~~204X154X85~~	~~UNDER WHEELHOUSE~~			~~NA~~	REV AB	REV AB
~~RADAR~~	~~RAJB1~~	~~TEAM ITALIA~~	~~X-JB.NN3D~~	~~15X11X7 JUNCTION BOX FOR NAVNET 3D~~	~~0,4KG~~	~~164X124X83~~	~~UNDER WHEELHOUSE~~			NA	REV AD	REV AC
RADAR#1	RAAT1	FURUNO	DRS-6A 4FT	NAVNET TZT ANTENNA 6KW 4FT	24KG	NA	MAST			NA	REV AD	REV AC
RADAR#1	RAPU1	FURUNO	MPU-002	NAVNET TZTBB PROCESSOR UNIT	8KG	300X395X209	UNDER WHEELHOUSE			153BTU/H	REV AD	REV AC
RADAR#1	RAKB1	FURUNO	MCU-002	NAVNET TZTBB CONTROL UNIT	0,2KG	115X59X35	WHEELHOUSE			5BTU/H	REV AD	REV AC
RADAR#1	RAPS1	FURUNO	PSU-012	NAVNET TZT POWER SUPPLY	1,8KG	316X271X100	UNDER WHEELHOUSE			650BTU/H	REV AD	REV AC
RADAR#1	RASW1	FURUNO	PSD-002	SWITCH BOX	0,75KG	106X97X80	BACKUP PANEL			NA	REV AE	REV AD
RADAR#1	RAJB1	TEAM ITALIA	X-JB.PS.24	10X10X5 JUNCTION BOX 24VDC POWER	0,3KG	170X113X62	UNDER WHEELHOUSE			NA	REV AD	REV AC
RADAR#1	RAHD1	TEAM ITALIA	HID2LAN	HID TO LAN	0,1KG	110,5X56,7X26,3	RACK			NA	REV AF	REV AF
RADAR#1	RATJ1	GENERIC	T-JOINER	T-JOINER NMEA2000 UNIT	0,1KG	NA	UNDER WHEELHOUSE			NA	REV AD	REV AC
RADAR#1	RATJ2	GENERIC	T-JOINER	T-JOINER NMEA2000 UNIT	0,1KG	NA	UNDER WHEELHOUSE			NA	REV AD	REV AC
RADAR#1	RATJ3	GENERIC	T-JOINER	T-JOINER NMEA2000 UNIT	0,1KG	NA	UNDER WHEELHOUSE			NA	REV AD	REV AC
RADAR#1	RATJ4	GENERIC	T-JOINER	T-JOINER NMEA2000 UNIT	0,1KG	NA	UNDER WHEELHOUSE			NA	REV AD	REV AC
~~RADAR#1~~	~~RADC1~~	~~MEAN WELL~~	~~SD-15B-12~~	~~24-12V DC-DC CONVERTER 1,25A~~	~~0,2KG~~	~~51X79X28~~	~~UNDER WHEELHOUSE~~			~~51BTU/H~~	REV AF	REV AF
RADAR#1	DSDU1	HATTELAND	HD19T21STD	DISPLAY UNIT 19" SERIE X	8KG	429X382X75	WHEELHOUSE	24VDC EMERGENCY RADAR#1 SW#2 220VAC MAIN DISPLAY SW#1	125W	425 BTU/H	REV AD	REV AC
RADAR#2	RAAT2	FURUNO	DRS-12A 4FT	NAVNET TZT ANTENNA 12KW 4FT	26KG	NA	MAST	24VDC SERVICE RADAR#2 SW#1	150W	NA	REV AD	REV AC
RADAR#2	RAPU2	FURUNO	MPU-002	NAVNET TZTBB PROCESSOR UNIT	8KG	300X395X209	UNDER WHEELHOUSE			153BTU/H	REV AD	REV AC
RADAR#2	RAKB2	FURUNO	MCU-002	NAVNET TZTBB CONTROL UNIT	0,2KG	115X59X35	WHEELHOUSE			5BTU/H	REV AD	REV AC
RADAR#2	RAPS2	FURUNO	PSU-012	NAVNET TZT POWER SUPPLY	1,8KG	316X271X100	UNDER WHEELHOUSE			650BTU/H	REV AD	REV AC
RADAR#2	RASW2	FURUNO	PSD-002	SWITCH BOX	0,75KG	106X97X80	BACKUP PANEL			NA	REV AE	REV AD
RADAR#2	RAJB2	TEAM ITALIA	X-JB.PS.24	10X10X5 JUNCTION BOX 24VDC POWER	0,3KG	170X113X62	UNDER WHEELHOUSE			NA	REV AD	REV AC
RADAR#2	RAHD2	TEAM ITALIA	HID2LAN	HID TO LAN	0,1KG	110,5X56,7X26,3	RACK			NA	REV AF	REV AF
~~RADAR#2~~	~~RADC2~~	~~MEAN WELL~~	~~SD-15B-12~~	~~24-12V DC-DC CONVERTER 1,25A~~	~~0,2KG~~	~~51X79X28~~	~~UNDER WHEELHOUSE~~			~~51BTU/H~~	REV AF	REV AF
ECHO#1	ESTD1	AIRMAR	B744V	ECHO TRANSDUCER	2,5KG	NA	HULL	24VDC EMERGENCY ECHO#1 SW#1	15W	NA		
~~ECHO#1~~	~~ESJB1~~	~~TEAM ITALIA~~	~~10X10X5 JB DFF1~~	~~10X10X5 JUNCTION BOX ECHO DFF1 SENSOR~~	~~0,3KG~~	~~113X113X62~~	~~BILGE~~			~~NA~~	REV AB	REV AB
~~ECHO#1~~	~~ESJB2~~	~~TEAM ITALIA~~	~~15X11X7 JB DFF1~~	~~15X11X7 JUNCTION BOX DFF1~~	~~0,4KG~~	~~164X124X83~~	~~UNDER WHEELHOUSE~~			~~NA~~	REV AB	REV AB
ECHO#1	ESJB2	TEAM ITALIA	X-JB.E.12P	15X11X7 JUNCTION BOX GENERIC 12P	0,4KG	164X124X83	UNDER WHEELHOUSE			NA	REV AB	REV AB
ECHO#1	ESJB1	TEAM ITALIA	X-JB.E.10P	10X10X5 JUNCTION BOX ECHO DFF1 SENSOR	0,3KG	113X113X62	BILGE			NA	REV AB	REV AB
ECHO#1	ESDF1	FURUNO	DFF1	ECHO INTERFACE	1,3KG	219X255X90	UNDER WHEELHOUSE			25BTU/H		
ECHO#1	ESHB1	FURUNO	HUB-101	HUB UNIT	0,8KG	224X199X56	UNDER WHEELHOUSE			20BTU/H	REV AD	REV AC
ECHO#2	ESTD2	AIRMAR	B744V	ECHO TRANSDUCER	2,5KG	NA	HULL	24VDC SERVICE ECHO#2 SW#1	2W	NA		
~~ECHO#2~~	~~ESJB3~~	~~TEAM ITALIA~~	~~19X14X7 JB ACTI~~	~~19X14X7 JUNCTION BOX ACTISENSE~~	~~0,5KG~~	~~204X154X85~~	~~BILGE~~			~~NA~~	REV AB	REV AB
~~ECHO#2~~	~~ESIF1~~	~~ACTISENSE~~	~~DST2~~	~~ECHO INTERFACE~~	~~0,2KG~~	~~NA~~	~~NA~~			~~4BTU/H~~	REV AB	REV AB
~~ECHO#2~~	~~ESJB4~~	~~TEAM ITALIA~~	~~10X10X5 JB ACTI~~	~~10X10X5 JUNCTION BOX ACTISENSE~~	~~0,3KG~~	~~113X113X62~~	~~UNDER WHEELHOUSE~~			~~NA~~	REV AB	REV AB
ECHO#2	ESJB3	TEAM ITALIA	X-JB.DST2	19X14X7 JUNCTION BOX WITH ACTISENSE	0,5KG	204X154X85	BILGE			4BTU/H	REV AB	REV AB
ECHO#2	ESJB4	TEAM ITALIA	X-JB.GEN.12P	10X10X5 JUNCTION BOX GENERIC 12P	0,3KG	113X113X62	UNDER WHEELHOUSE			NA	REV AB	REV AB
GPS	GPAT1	FURUNO	GP320	GPS ANTENNA	0,6KG	NA	MAST	24VDC RADIO GPS SW#1	15W	44BTU/H		
GPS	GPAJ1	GLOMEX	V9174	BASE FOR ANTENNA	0,2KG	NA	MAST			NA		
~~GPS~~	~~GPCV1~~	~~ALFATRONIX~~	~~PV3I~~	~~24VDC-12VDC~~	~~0,3KG~~	~~NA~~	~~NA~~			~~NA~~	REV AB	REV AB
~~GPS~~	~~GPJB1~~	~~TEAM ITALIA~~	~~24X19X9 JB GP320~~	~~24X19X9 JUNCTION BOX GP320B~~	~~0,7KG~~	~~256X200X102~~	~~RADIO~~			~~NA~~	REV AB	REV AB
~~GPS~~	~~GPGT1~~	~~TEAM ITALIA~~	~~GTNMEA 8P~~	~~GTNMEA 8P~~	~~NA~~	~~NA~~	~~NA~~			~~NA~~	REV AB	REV AB
~~GPS~~	~~GPJB2~~	~~TEAM ITALIA~~	~~19X14X7 JB GT~~	~~19X14X7 JUNCTION BOX GT NMEA 8P~~	~~0,5KG~~	~~204X154X85~~	~~RADIO~~			~~NA~~	REV AB	REV AB
GPS	GPJB1	TEAM ITALIA	X-JB.GPS.BKP2	24X19X9 JUNCTION BOX GPS BACKUP 2 WITH ALFATRONIX	1,3KG	282X200X102	RADIO			NA	REV AB	REV AB
GPS	GPJB2	TEAM ITALIA	X-JB.GT.8P	19X14X7 JUNCTION BOX WITH GT NMEA 8P	1KG	204X154X85	RADIO			NA	REV AB	REV AB
~~NMEA~~	~~NMJB1~~	~~TEAM ITALIA~~	~~38X30X12 JB NMEA~~	~~38X30X12 JUNCTION BOX NMEA~~	~~1,4KG~~	~~414X308X135~~	~~UNDER WHEELHOUSE~~	24VDC SERVICE NMEA SW#1	2W	~~NA~~	REV AB	REV AB
~~NMEA~~	~~NMNO1~~	~~NOMATRONICS~~	~~MAGIPLEX 8~~	~~NMEA BOX UNIT~~	~~0,5KG/2KG~~	~~360X200X52~~	~~NA~~			~~7BTU/H~~	REV AB	REV AB
NMEA	NMJB1	TEAM ITALIA	X-JB.NOM8X8	38X30X12 JUNCTION BOX WITH NOMATRONICS	1,4KG	414X308X135	UNDER WHEELHOUSE			7BTU/H	REV AB	REV AB
NMEA	NMAS1	ACTISENSE	NGW-1 ISO	NMEA2000 TO NMEA0183 CONVERTER	0,1KG	NA	UNDER WHEELHOUSE			NA	REV AD	REV AC
RACK	RKRK1	TEAM ITALIA	RACK	RACK WITH N°1 DRAWER 2U + N°2 SHELF (FOR YARD USE)	27KG	500X500XTBD	YARD	NA	NA	NA	REV AC	REV AB
CHART	PLPC1	TEAM ITALIA	PC	PC 1 UNIT RACK	6KG	480X352X45	RACK	24VDC SERVICE CHART SW#1	120W	330BTU/H	REV AD	REV AC
CHART	PLHD1	TEAM ITALIA	HID2LAN	HID TO LAN	0,1KG	110,5X56,7X26,3	RACK			NA	REV AF	REV AF
CHART	PLSW1	MAXSEA	TIMEZERO	CARTOGRAPHY UNIT	NA	NA	NA			NA	REV AD	REV AC
CHART	PLLI1	GENERIC	LICENSE R	RADAR LICENSE FOR MAXSEA	NA	NA	NA			NA	REV AD	REV AC
CHART	PLLI2	GENERIC	LICENSE E	ECHOSOUNDER LICENSE FOR MAXSEA	NA	NA	NA			NA	REV AD	REV AC
~~CHART~~	~~PLTB1~~	~~NSI~~	~~Z38~~	~~TRACKBALL Z38 + 3 PUSH BUTTONS~~	~~0,2KG~~	~~110X125X40~~	~~WHEELHOUSE~~			~~NA~~	REV AF	REV AF
WIND	WSWS1	AIRMAR	PB200	WEATHERSTATION	0,2KG	NA	MAST	24VDC SERVICE WIND SW#1	2W	NA		
WIND	WSAJ1	GLOMEX	V9174	BASE FOR ANTENNA	0,2KG	NA	MAST			NA		
~~WIND~~	~~WSJB1~~	~~TEAM ITALIA~~	~~24X19X9 JB WIND~~	~~24X19X9 JUNCTION BOX WIND~~	~~0,7KG~~	~~256X200X102~~	~~UNDER WHEELHOUSE~~			~~NA~~	REV AB	REV AB
~~WIND~~	~~WSCV1~~	~~ALFATRONIX~~	~~PV3I~~	~~24VDC-12VDC~~	~~0,3KG~~	~~NA~~	~~NA~~			~~NA~~	REV AB	REV AB
WIND	WSJB1	TEAM ITALIA	X.JB.WS	24X19X9 JUNCTION BOX WIND WITH ALFATRONIX	1,3KG	256X200X102	UNDER WHEELHOUSE			NA	REV AB	REV AB
~~WIND~~	~~WSCB1~~	~~FURUNO~~	~~MJ-A65PF0003~~	~~DATA2 NMEA CABLE~~	~~NA~~	~~NA~~	~~NA~~	~~24VDC SERVICE WIND SW#2~~	~~2W~~	~~NA~~	REV AD	REV AC
~~WIND~~	~~WSRD1~~	~~FURUNO~~	~~RD33~~	~~REPEATER DISPLAY~~	~~0,6KG~~	~~145X125X61~~	~~WHEELHOUSE~~			~~8BTU/H~~	REV AD	REV AC
~~WIND~~	~~WSJB2~~	~~TEAM ITALIA~~	~~10X10X5 JB RD33~~	~~10X10X5 JUNCTION BOX WIND REPEATER~~	~~0,3KG~~	~~113X113X62~~	~~UNDER WHEELHOUSE~~			~~NA~~	REV AB	REV AB

~~WIND~~	~~WSJB2~~	~~TEAM ITALIA~~	~~X-JB.REP~~	~~10X10X5 JUNCTION BOX FOR REPEATER~~	~~0,3KG~~	~~113X113X62~~	~~UNDER WHEELHOUSE~~			~~NA~~	REV AD	REV AC
~~WIND~~	~~WSCB2~~	~~FURUNO~~	~~MJ-A6SPF0003~~	~~DATA2 NMEA CABLE~~	~~NA~~	~~NA~~	~~NA~~	~~24VDC SERVICE WIND SW#3~~	~~2W~~	~~NA~~	REV AD	REV AC
~~WIND~~	~~WSRD2~~	~~FURUNO~~	~~RD33~~	~~REPEATER DISPLAY~~	~~0,6KG~~	~~145X125X61~~	~~PORTWING~~			~~8BTU/H~~	REV AD	REV AC
~~WIND~~	~~WSJB3~~	~~TEAM ITALIA~~	~~10X10X5 JB RD33~~	~~10X10X5 JUNCTION BOX WIND REPEATER~~	~~0,3KG~~	~~113X113X62~~	~~PORT WING~~			~~NA~~	REV AB	REV AB
~~WIND~~	~~WSJB3~~	~~TEAM ITALIA~~	~~X-JB.REP~~	~~10X10X5 JUNCTION BOX FOR REPEATER~~	~~0,3KG~~	~~113X113X62~~	~~PORT WING~~			~~NA~~	REV AD	REV AC
~~WIND~~	~~WSCB3~~	~~FURUNO~~	~~MJ-A6SPF0003~~	~~DATA2 NMEA CABLE~~	~~NA~~	~~NA~~	~~NA~~	~~24VDC SERVICE WIND SW#4~~	~~2W~~	~~NA~~	REV AD	REV AC
~~WIND~~	~~WSRD3~~	~~FURUNO~~	~~RD33~~	~~REPEATER DISPLAY~~	~~0,6KG~~	~~145X125X61~~	~~STBD WING~~			~~8BTU/H~~	REV AD	REV AC
~~WIND~~	~~WSJB4~~	~~TEAM ITALIA~~	~~10X10X5 JB RD33~~	~~10X10X5 JUNCTION BOX WIND REPEATER~~	~~0,3KG~~	~~113X113X62~~	~~STBD WING~~			~~NA~~	REV AB	REV AB
~~WIND~~	~~WSJB4~~	~~TEAM ITALIA~~	~~X-JB.REP~~	~~10X10X5 JUNCTION BOX FOR REPEATER~~	~~0,3KG~~	~~113X113X62~~	~~STBD WING~~			~~NA~~	REV AD	REV AC
WIND	WSRD1	FURUNO	FI-70	REMOTE DISPLAY	0,4KG	115X115X42	WHEELHOUSE	FROM NMEA2000 NETWORK	3W	10BTU/H	REV AD	REV AC
WIND	WSRD2	FURUNO	FI-70	REMOTE DISPLAY	0,4KG	115X115X42	PORT WING	FROM NMEA2000 NETWORK	3W	10BTU/H	REV AD	REV AC
WIND	WSTJ1	GENERIC	T-JOINER	T-JOINER NMEA2000 UNIT	0,1KG	NA	PORT WING			NA	REV AD	REV AC
WIND	WSTE1	GENERIC	TERMINATORE	TERMINATORE RETE NMEA2000	0,1KG	NA	PORT WING			NA	REV AD	REV AC
WIND	WSRD3	FURUNO	FI-70	REMOTE DISPLAY	0,4KG	115X115X42	STBD WING	FROM NMEA2000 NETWORK	3W	10BTU/H	REV AD	REV AC
WIND	WSTJ2	GENERIC	T-JOINER	T-JOINER NMEA2000 UNIT	0,1KG	NA	STBD WING			NA	REV AD	REV AC
WIND	WSTE2	GENERIC	TERMINATORE	TERMINATORE RETE NMEA2000	0,1KG	NA	STBD WING			NA	REV AD	REV AC
AUTOPILOT	APJP1	PLATH	JUPITER	GYRO OVERHEAD	10KG	NA	CEILING	24VDC SERVICE AUTOPILOT SW#1	15W	NA		
AUTOPILOT	APFB1	NAVIS	RFU300	FEEDBACK UNIT	3KG	NA	STEERING ROOM			NA		
AUTOPILOT	APFX1	PLATH	PL26026	FLUXGATE INTERFACE	NA	NA	CEILING			NA		
~~AUTOPILOT~~	~~APJB1~~	~~TEAM ITALIA~~	~~10X10X5 JB JUP~~	~~10X10X5 JUNCTION BOX JUPITER~~	~~0,3KG~~	~~113X113X62~~	~~CEILING~~			~~NA~~	REV AB	REV AB
AUTOPILOT	APJB1	TEAM ITALIA	X-JB.GEN.12P	10X10X5 JUNCTION BOX GENERIC 12P	0,3KG	164X124X83	CEILING			NA	REV AB	REV AB
AUTOPILOT	APTI1	NFU	TILLER	TILLER UNIT	0,2KG	NA	WHEELHOUSE			NA		
AUTOPILOT	APDU1	NAVIS	AP3000	AUTOPILOT DISPLAY	0,4KG	144X144X68	WHELLHOUSE			3BTU/H		
AUTOPILOT	APJI1	TEAM ITALIA	TT131000	FLUXGATE SENSOR NMEA INTERFACE	0,4KG	153X110X66	UNDER WHEELHOUSE			34BTU/H		
AUTOPILOT	APSC1	NAVIS	CU-M	CU M UNIT	4,7KG	340X240X128	UNDER WHEELHOUSE			8BTU/H		
AUTOPILOT	APSC2	NAVIS	CU-MPR	CU MPR UNIT	10KG	320X420X128	UNDER WHEELHOUSE			7BTU/H		
~~AUTOPILOT~~	~~APTK1~~	~~TEAM ITALIA~~	~~TAKE OVER~~	~~TAKEOVER INTERFACE~~	~~1KG~~	~~396X316X128~~	~~UNDER WHEELHOUSE~~			~~NA~~	REV AB	REV AB
AUTOPILOT	APTK1	TEAM ITALIA	X-JB.TO	TAKEOVER INTERFACE	1KG	396X316X128	UNDER WHEELHOUSE			NA	REV AB	REV AB
FLUXGATE	GBFX1	FURUNO	PG-500	FLUXGATE SENSOR	0,3KG	152X130X62	OWNER BED	24VDC EMERGENCY FLUXGATE SW#1	2W	7BTU/H		
~~FLUXGATE~~	~~GBJB1~~	~~TEAM ITALIA~~	~~15X11X7 JB PG5~~	~~15X11X7 JUNCTION BOX PG500~~	~~0,4KG~~	~~164X124X83~~	~~OWNER BED~~			~~NA~~	REV AB	REV AB
~~FLUXGATE~~	~~GBJB2~~	~~TEAM ITALIA~~	~~15X11X7 JB PG5~~	~~15X11X7 JUNCTION BOX PG500~~	~~0,4KG~~	~~164X124X83~~	~~UNDER WHEELHOUSE~~			~~NA~~	REV AB	REV AB
~~FLUXGATE~~	~~GBGT1~~	~~TEAM ITALIA~~	~~GTNMEA 8P~~	~~GTNMEA 8P~~	~~NA~~	~~NA~~	~~NA~~			~~NA~~	REV AB	REV AB
~~FLUXGATE~~	~~GBJB3~~	~~TEAM ITALIA~~	~~19X14X7 JB GT~~	~~19X14X7 JUNCTION BOX GT NMEA 8P~~	~~0,5KG~~	~~204X154X85~~	~~UNDER WHEELHOUSE~~			~~NA~~	REV AB	REV AB
FLUXGATE	GBJB1	TEAM ITALIA	X-JB.GEN.30P	15X11X7 JUNCTION BOX GENERIC 30P	0,4KG	164X183X83	OWNER BED			NA	REV AB	REV AB
FLUXGATE	GBJB2	TEAM ITALIA	X-JB.GEN.30P	15X11X7 JUNCTION BOX GENERIC 30P	0,4KG	164X183X83	UNDER WHEELHOUSE			NA	REV AB	REV AB
FLUXGATE	GBJB3	TEAM ITALIA	X-JB.GT.8P	19X14X7 JUNCTION BOX WITH GT NMEA 8P	1KG	204X154X85	UNDER WHEELHOUSE			NA	REV AB	REV AB
THERMAL CAMERA	TCCM1	FLIR	M400	THERMAL CAMERA	13KG	NA	MAST	24VDC SERVICE THERMAL SW#1	130W	450BTU/H	REV AF	REV AF
THERMAL CAMERA	TCCU1	FLIR	M400	THERMAL CAMERA CONTROLLER	0,45KG	91X142X82	WHEELHOUSE			NA	REV AF	REV AF
~~THERMAL CAMERA~~	~~TCSW1~~	~~MOXA~~	~~EDS205~~	~~SWITCH 5P~~	~~0,2KG~~	~~100X87X25~~	~~UNDER WHEELHOUSE~~			~~7BTU/H~~	~~REV AG~~	~~REV AF~~
~~THERMAL CAMERA~~	~~TCJB1~~	~~TEAM ITALIA~~	~~X-JB.PS.24~~	~~10X10X5 JUNCTION BOX 24VDC POWER~~	~~0,3KG~~	~~170X113X62~~	~~UNDER WHEELHOUSE~~			~~NA~~	~~REV AG~~	~~REV AF~~
THERMAL CAMERA	TCJB1	TEAM ITALIA	30X22X12 JB	30X22X12 JUNCTION BOX	1KG	314X240X130	UNDER WHEELHOUSE			NA	REV AG	REV AF
THERMAL CAMERA	TCAD1	TEAM ITALIA	MYWA-06	POE ADAPTER	0,1KG	NA	INSIDE JUNCTION BOX			NA	REV AG	REV AF
THERMAL CAMERA	TCAD2	TEAM ITALIA	MYWA-06	POE ADAPTER	0,1KG	NA	INSIDE JUNCTION BOX			NA	REV AG	REV AF
THERMAL CAMERA	TCSW1	FLIR	SWITCH	POE SWITCH	0,3KG	NA	INSIDE JUNCTION BOX			10BTU/H	REV AG	REV AF
THERMAL CAMERA	TCCV1	BLACK MAGIC	SDI TO HDMI	MICRO CONVERTER	0,2KG	77X46X25	RACK	FROM DISPLAY SYSTEM	2W	7BTU/H	REV AF	REV AF
THERMAL CAMERA	TCCV2	BLACK MAGIC	SDI TO HDMI	MICRO CONVERTER	0,2KG	77X46X25	RACK	FROM DISPLAY SYSTEM	2W	7BTU/H	REV AF	REV AF
DISPLAY	DSDU2	HATTELAND	HD19T21STD	19" SERIE X DISPLAY	8KG	429X382X75	WHEELHOUSE	24VDC FROM MONITORING MAIN DISPLAY SW#2 220VAC	125W	425 BTU/H	REV AD	REV AC
DISPLAY	DSDU3	HATTELAND	HD19T21STD	19" SERIE X DISPLAY	8KG	429X382X75	WHEELHOUSE	24VDC SERVICE DISPLAY SW#3 MAIN DISPLAY SW#3 220VAC	125W	425 BTU/H	REV AD	REV AC
DISPLAY	DSDU4	HATTELAND	HD19T21STD	19" SERIE X DISPLAY	8KG	429X382X75	WHEELHOUSE	24VDC SERVICE DISPLAY SW#4 MAIN DISPLAY SW#4 220VAC	125W	425 BTU/H	REV AD	REV AC
DISPLAY	RACV1	KRAMER	PT-571HDCP	DVI TO CAT5 CONVERTER	0,15KG	62X52X24	RACK	24VDC SERVICE DISPLAY SW#5 220VAC MAIN DISPLAY SW#5	300W	10BTU/H	REV AF	REV AF
DISPLAY	RACV3	KRAMER	PT-572HDCP	CAT5 TO DVI CONVERTER	0,15KG	62X52X24	CAPTAIN CABIN			10BTU/H	REV AF	REV AF
DISPLAY	RACV2	KRAMER	PT-571HDCP	DVI TO CAT5 CONVERTER	0,15KG	62X52X24	RACK			10BTU/H	REV AF	REV AF
DISPLAY	RACV4	KRAMER	PT-572HDCP	CAT5 TO DVI CONVERTER	0,15KG	62X52X24	OWNER CABIN			10BTU/H	REV AF	REV AF
DISPLAY	DSSW1	VICTRON ENERGY	FILAX 2	POWER SWITCH	0,8KG	120X255X75	UNDER WHEELHOUSE			NA	REV AF	REV AF
DISPLAY	DSVM1	ATEN	AT MATRIX	DVI MATRIX 8X8	TBD	272X314X64	RACK			TBD	REV AF	REV AF
DISPLAY	DSPS1	GENERIC	MULTI SOCKET R	RACK MULTISOCKET	0,5KG	NA	RACK			NA	REV AF	REV AF
DISPLAY	DSIN1	VICTRON ENERGY	S300-224	INVERTER	15KG	215X155X72	UNDER WHEELHOUSE			1000BTU/H	REV AF	REV AF
DISPLAY	DSJB1	TEAM ITALIA	10X10X5 JB	10X10X5 JUNCTION BOX	0,3KG	113X113X62	UNDER WHEELHOUSE			NA	REV AF	REV AF
WHC	WAPP1	HATTELAND	HD15T21MMC	TOUCH PANEL PC 15" SERIE X	7KG	356X307X78	WHEELHOUSE	24VDC EMERGENCY WHC SW#1 220VAC MAIN WHC SW#1	600W	238BTU/H		
WHC	WASW1	BEIJER	IX	SOFTWARE	NA	NA	NA			NA	REV AF	REV AF
~~WHC~~	~~WAPP2~~	~~HATTELAND~~	~~HD15T21MMC~~	~~TOUCH PANEL PC 15" SERIE X (**ONYX SUPPLY**)~~	~~7KG~~	~~356X307X78~~	~~WHEELHOUSE~~			~~238BTU/H~~	REV AB	REV AB
~~WHC~~	~~WAPA1~~	~~TEAM ITALIA~~	~~WHC A~~	~~WHC PANEL~~	~~30KG~~	~~700X500X250~~	~~UNDER WHEELHOUSE~~			~~1300BTU/H~~	REV AB	REV AB
~~WHC~~	~~WACV1~~	~~MEAN WELL~~	~~SDR-480P-24~~	~~POWER SUPPLY~~	~~1,6KG~~	~~86X126X129~~	~~NA~~			~~1870BTU/H~~	REV AB	REV AB
~~WHC~~	~~WADI1~~	~~MEAN WELL~~	~~DR-RDN20~~	~~DIODO~~	~~0,5KG~~	~~125X56X100~~	~~NA~~			~~1632BTU/H~~	REV AB	REV AB
~~WHC~~	~~WADC1~~	~~MEAN WELL~~	~~SD500L-24~~	~~DC-DC CONVERTER~~	~~1,2KG~~	~~215X115X50~~	~~NA~~			~~1710BTU/H~~	REV AB	REV AB
~~WHC~~	~~WAPB1~~	~~TEAM ITALIA~~	~~POWER BOX A~~	~~WHC POWER BOX TYPE A~~	~~10KG~~	~~400X350X200~~	~~UNDER WHEELHOUSE~~			~~NA~~	REV AB	REV AB
WHC	WAPS1	TEAM ITALIA	X-WHC.M.PS.V1	WHC POWER BOX	10KG	450X350X200	UNDER WHEELHOUSE			NA	REV AB	REV AB
WHC	WAPA1	TEAM ITALIA	X-WHC.M.V1	WHC PANEL	30KG	700X500X280	UNDER WHEELHOUSE			1300BTU/H	REV AB	REV AB
WHC	WAPR1	TEAM ITALIA	OM-900B	PITCH&ROLL INCLINOMETER	0,5KG	NA	UNDER WHEELHOUSE			NA	REV AF	REV AF
WHC	WADG1	TEAM ITALIA	DIAGNOSTIC	DIAGNOSTIC SYSTEM	TBD	5 UNIT RACK	RACK			TBD	REV AD	REV AC
MULTICONTROL	MCJU1	TEAM ITALIA	JOGGER	JOGGER UNIT	0,3KG	NA	WHEELHOUSE	FROM WHC SYSTEM	NA	NA	REV AF	REV AF
MULTICONTROL	MCTB1	NSI	Z38+3 BUTTONS	TRACKBALL Z38 + 3 PUSH BUTTONS (WITH FRAME)	0,5KG	110X125X40	WHEELHOUSE			NA	REV AF	REV AF
MULTICONTROL	MCJI1	TEAM ITALIA	TT-1605202	JOGGER INTERFACE	0,4KG	TBD	UNDER WHEELHOUSE			TBD	REV AF	REV AF
MULTICONTROL	MCHD1	TEAM ITALIA	HID2LAN	HID TO LAN FOR TRACKBALL	0,1KG	110,5X56,7X26,3	UNDER WHEELHOUSE			NA	REV AF	REV AF
MULTICONTROL	MCBX1	TEAM ITALIA	X-M-CTRL.3	MULTICONTROL	TBD	2 UNIT RACK	RACK			TBD	REV AF	REV AF
MULTICONTROL	MCHD2	TEAM ITALIA	HID2LAN	HID TO LAN	0,1KG	110,5X56,7X26,3	CLOSE TO MONITORING			NA	REV AF	REV AF
VHF#1	VHAT1	BANTEN	BA247	VHF ANTENNA	0,6KG	NA	MAST	24VDC RADIO VHF#1 SW#1	170W	NA		
VHF#1	VHAJ1	GLOMEX	V9174	BASE FOR ANTENNA	0,2KG	NA	MAST			NA		
VHF#1	VHAT2	BANTEN	BA247	VHF ANTENNA	0,6KG	NA	MAST			NA		
VHF#1	VHAJ2	GLOMEX	V9174	BASE FOR ANTENNA	0,2KG	NA	MAST			NA		
VHF#1	VHHU1	SAILOR	RT6201	VHF HANDSET	0,2KG	62X226X75	WHEELHOUSE			NA		
VHF#1	VHRT1	SAILOR	RT6215	VHF TRANSCEIVER	4KG	190X106X133	WHEELHOUSE			80BTU/H		
VHF#1	VHCB1	SAILOR	ACC	ACC CABLE	NA	NA	NA			NA		
~~VHF#1~~	~~VHJB1~~	~~TEAM ITALIA~~	~~15X11X7 JB VHF~~	~~15X11X7 JUNCTION BOX VHF~~	~~0,4KG~~	~~164X124X83~~	~~UNDER WHEELHOUSE~~			~~NA~~	REV AB	REV AB
VHF#1	VHJB1	TEAM ITALIA	X-JB.VHF	15X11X7 JUNCTION BOX VHF	0,4KG	164X124X83	UNDER WHEELHOUSE			NA	REV AB	REV AB
VHF#1	VHJB2	SAILOR	C6208	VHF JUNCTION BOX	0,4KG	101X101X29	CREWMESS			NA		
VHF#1	VHCU1	SAILOR	TT6205	REMOTE CONTROL VHF	0,6KG	70X52X173	CREWMESS			5BTU/H		
~~VHF#1~~	~~VHCV1~~	~~SAILOR~~	~~TT6090~~	~~POWER CONVERTER~~	~~1KG~~	~~190X85X33~~	~~UNDER WHEELHOUSE~~			~~136BTU/H~~	REV AD	REV AC
VHF#1	VHCV1	SAILOR	N420	POWER CONVERTER	1KG	105X155X78	UNDER WHEELHOUSE			136BTU/H	REV AD	REV AC
VHF#2	VHAT3	BANTEN	BA247	VHF ANTENNA	0,6KG	NA	MAST			NA	REV AD	REV AC

VHF#2	VHAJ3	GLOMEX	V9174	BASE FOR ANTENNA	0,2KG	NA	MAST			NA	REV AD	REV AC
VHF#2	VHHU2	SAILOR	RT6201	VHF HANDSET	0,2KG	62X226X75	WHEELHOUSE			NA	REV AE	REV AD
VHF#2	VHRT2	SAILOR	RT6215	VHF TRANSCEIVER	4KG	190X106X133	WHEELHOUSE			80BTU/H	REV AE	REV AD
VHF#2	VHCB2	SAILOR	ACC	ACC CABLE	NA	NA	NA			NA	REV AD	REV AC
VHF#2	VHJB3	TEAM ITALIA	X-JB.VHF	15X11X7 JUNCTION BOX VHF	0,4KG	164X124X83	UNDER WHEELHOUSE	24VDC SERVICE VHF#2 SW#1	170W	NA	REV AE	REV AD
VHF#2	VHJB4	SAILOR	C6208	VHF JUNCTION BOX	0,4KG	101X101X29	PORT WING			NA	REV AD	REV AC
VHF#2	VHCU2	SAILOR	TT6205	REMOTE CONTROL VHF	0,6KG	70X52X173	PORT WING			5BTU/H	REV AD	REV AC
VHF#2	VHJB5	SAILOR	C6208	VHF JUNCTION BOX	0,4KG	101X101X29	STBD WING			NA	REV AD	REV AC
VHF#2	VHCU3	SAILOR	TT6205	REMOTE CONTROL VHF	0,6KG	70X52X173	STBD WING			5BTU/H	REV AD	REV AC
VHF#2	VHCV2	SAILOR	N420	POWER CONVERTER	1KG	105X155X78	UNDER WHEELHOUSE			136BTU/H	REV AE	REV AD
SSB	RTAJ1	BANTEN	BA020	SSB ADAPTER UNIT	NA	NA	MAST			NA		
SSB	RTAT1	BANTEN	BA601	SSB ANTENNA 7MT	5KG	NA	MAST			NA		
SSB	RTAJ2	BANTEN	BA015	SSB ADAPTER UNIT	NA	NA	MAST			NA		
SSB	RTAJ3	BANTEN	BA020	SSB ADAPTER UNIT	NA	NA	MAST			NA		
SSB	RTAJ4	BANTEN	BA015	SSB ADAPTER UNIT	NA	NA	MAST			NA		
SSB	RTAT2	BANTEN	BA601	SSB ANTENNA 7MT	5KG	NA	MAST			NA		
SSB	RTAU1	SAILOR	RT6300	SSB ANTENNA TUNER	3,3KG	290X540X480	MAX 1,5MT FROM TX ANT	24VDC RADIO SSB SW#1	420W	520BTU/H		
SSB	RTHU1	SAILOR	RT6300	SSB HANDSET	0,8KG	62X226X75	RADIO			NA		
SSB	RTCU1	SAILOR	RT6300	SSB DISPLAY	3,3KG	241X107X99	RADIO			16BTU/H		
SSB	RTCB1	SAILOR	ACC	ACC CABLE	NA	NA	NA			NA		
~~SSB~~	~~RTJB1~~	~~TEAM ITALIA~~	~~15X11X7 JB SSB~~	~~15X11X7 JUNCTION BOX SSB~~	~~0,4KG~~	~~164X124X83~~	~~RADIO~~			~~NA~~	REV AB	REV AB
SSB	RTJB1	TEAM ITALIA	X-JB.SSB	15X11X7 JUNCTION BOX SSB	0,4KG	164X124X83	RADIO			NA	REV AB	REV AB
SSB	RTTU1	SAILOR	TU636X	SSB TRANSCEIVER	19KG	391X430X145	RADIO			290BTU/H		
AIS	AITU1	FURUNO	FA50	AIS TRANSPONDER	1,7KG	255X219X90	UNDER WHEELHOUSE			82BTU/H	REV AD	REV AC
AIS	AIJA2	GLOMEX	V9174	ADAPTER FOR ANTENNA	0,2KG	NA	MAST			NA	REV AD	REV AC
AIS	AIAT2	BANTEN	BA247	VHF ANTENNA	0,6KG	NA	MAST	24VDC EMERGENCY AIS SW#1	25W	NA	REV AD	REV AC
AIS	AIJA1	GLOMEX	V9174	ADAPTER FOR ANTENNA	0,2KG	NA	MAST			NA	REV AD	REV AC
AIS	AIAT1	FURUNO	GPA017S	GPS ANTENNA	0,2KG	NA	MAST			NA	REV AD	REV AC
AIS	AIJB1	TEAM ITALIA	X-JB.GEN.12P	10X10X5 JUNCTION BOX GENERIC 12P	0,3KG	113X113X62	UNDER WHEELHOUSE			NA	REV AD	REV AC
GSM	GSAJ1	BANTEN	BA15650	ADAPTER FOR GSM ANTENNA	0,2KG	NA	MAST			NA	REV AD	REV AC
GSM	GSAT1	BANTEN	BA1990	GSM ANTENNA	0,5KG	NA	MAST	220VAC MAIN GSM SW#1	2W	NA	REV AD	REV AC
GSM	GSAJ2	GLOMEX	V9174	BASE FOR ANTENNA	0,2KG	NA	MAST			NA	REV AD	REV AC
GSM	GSPU1	TELTONIKA (USA)	TVF200	GSM INTERFACE	0,5KG	106X140X37	RACK			7BTU/H	REV AD	REV AC
SAFETY SYSTEM	VHF PORT1	SAILOR	SP3510	VHF PORTABLE COMMERCIAL	0,35KG	NA	NA	NA	NA	NA		
SAFETY SYSTEM	VHF PORT2	SAILOR	SP3510	VHF PORTABLE COMMERCIAL	0,35KG	NA	NA	NA	NA	NA		
SAFETY SYSTEM	VHF PORT3	SAILOR	SP3510	VHF PORTABLE COMMERCIAL	0,35KG	NA	NA	NA	NA	NA		
CABLE SPARE			HAMMER22	CABLE HAMMER22				NA	NA	NA		
CABLE SPARE			BROADPRO50	CABLE BROADPRO50				NA	NA	NA		